GENERAL NOTES

1. ALL WORK TO BE PERFORMED SHALL BE IN ACCORDANCE WITH THE LATEST STANDARD SPECIFICATIONS AND SPECIAL PROVISIONS AS ADOPTED BY THE COUNCIL OF THE CITY OF SACRAMENTO AND LATEST CALTRANS STANDARD PLANS AND SPECIFICATIONS.

2. FOR SPECIFICATIONS OF A TECHNICAL NATURE NOT COVERED BY THE CITY OF SACRAMENTO STANDARD SPECIFICATIONS AND LATEST PROVISIONS, THE LATEST STANDARD SPECIFICATION AND STANDARD PLANS OF THE STATE OF CALIFORNIA BUSINESS, TRANSPORTATION AGENCY AND HOUSING DEPARTMENT OF THE TRANSPORTATION AND HOUSING AGENCY, DEPARTMENT OF TRANSPORTATION SHALL APPLY.

3. ALL MATERIALS TO BE REMOVED AND SALVAGED, SHALL BE DELIVERED TO THE CITY, THE CITY CORPORATE CENTER NORTH, 918 DEL PASO RD. SACRAMENTO, CALIFORNIA WITHOUT DAMAGE.

4. ALL TERMINAL COMPARTMENTS LOCATED ON STANDARDS SHALL BE MOUNTED ON THE SIDE FARTHEST FROM VEHICULAR TRAFFIC, UNLESS OTHERWISE SPECIFIED, OR DIRECTED BY THE ENGINEER.

5. PULL BOXES SHALL BE PLACED IN SIDEWALK AREAS AND SHALL NOT BE PLACED IN DRIVEWAYS, IN VEHICLE TRAFFIC LANES, OR IN SIDEWALK HANDICAPPED RAMP AREAS.

6. CONDUCTORS BETWEEN BASE OF ELECTROLIER AND LUMINAIRE SHALL BE No. 10 THW MINIMUM.

7. THREE FEET OF SLACK SHALL BE PROVIDED IN EACH PULL BOX FOR EACH CONDUCTOR.

8. EXACT LOCATIONS OF ALL STANDARDS, PEDESTAL AND CABINET WILL BE DETERMINED BY THE ENGINEER PRIOR TO INSTALLATION, AND SHALL BE AT LEAST 3 FEET FROM THE FACE OF CURB OR AT BACK EDGE OF SIDE WALK.

9. LUMINAIRE MAST ARMS SHALL BE 12 FEET IN LENGTH UNLESS OTHERWISE SPECIFIED.

10. ALL TRAFFIC SIGNAL HEADS SHALL HAVE A LOUVERED BACK PLATE AND TUNNEL VISORS.

11. ALL EXPOSED RIGID METALLIC CONDUIT STUBS/CAPS AND ALL METAL TREADS AND STANDARD SCREW JOINT SHALL BE PAINTED EITHER WITH HIGH ZINC DUST CONTENT PAINT CONFORMING TO THE REQUIREMENTS OF THE MILITARY SPECIFICATION : MIL-P-21035 OR WITH PRIMER CONFORMING TO THE LATEST STATE OF CALIFORNIA DEPARTMENT OF TRANSPORTATION STANDARD SPECIFICATIONS SECTION 91-2.01 ZINC RICH PRIMER, ORGANIC VEHICLE TYPE EXCEPT THAT PRIMER SHALL NOT BE THINNED.

12. AT ALL JUNCTIONS SUCH AS A PULL BOXES BASES, AND PEDESTALS WHERE PVC CONDUITS ARE INSTALLED, ALL RIGID GALVANIZED CONDUITS AT THESE LOCATIONS SHALL BE PROVIDED WITH GROUNDING BUSHINGS AND CONNECTED TO THE GROUNDING CONDUCTORS.

13. ALL LUMINAIRES SHALL BE SUPPLIED WITHOUT PHOTO CELL RECEPTACLES UNLESS OTHERWISE SPECIFIED.

14. PULL ROPES USED TO PULL CONDUCTORS IN CONDUIT SHALL BE A MINIMUM OF 1/4" DIAMETER.

15. SEE SPECIAL PROVISIONS FOR LOOP CONDUCTOR AND LEAD-IN A SPECIFICATIONS.

16. LOOP DIMENSIONS SHALL BE 6' x 6' SQUARES OR 6' DIAMETER CIRCULAR LOOP UNLESS OTHERWISE SHOWN ON THE PLANS.

REV.	DATE	DESCRIPTION
1		
2		
3		

R:\Utilstds\City_Std_Details\DOT_Electrical_Details\E-10

CITY OF SACRAMENTO
DEPARTMENT OF TRANSPORTATION

GENERAL NOTES

APPR'D BY: Nicholas Thomas NO SCALE

DATE: MAY 2007 DWG. NO. EE - 10

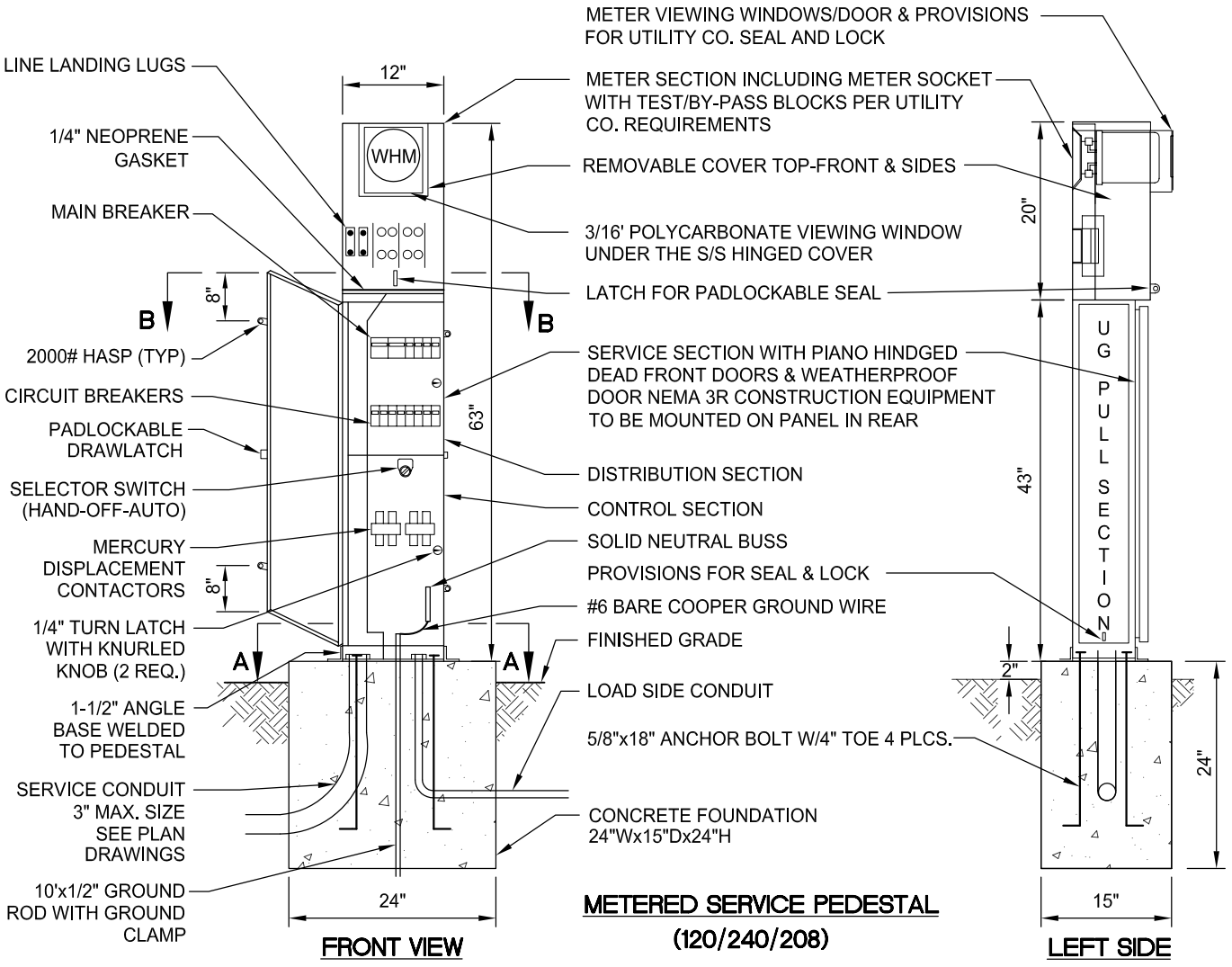

FRONT VIEW

METERED SERVICE PEDESTAL

(120/240/208)

LEFT SIDE

1. EXTERIOR 14 GAUGE #304D STAINLESS STEEL, INTERIOR DEAD FRONT PANEL & BACK PAN SHALL BE 14 GAUGE STEEL PAINTED WHITE ELECTRICALLY WELDED AND REINFORCED WHERE REQUIRED.
2. CONSTRUCTION IS NEMA 3R AND 12, RAINTIGHT AND DUSTTIGHT.
3. ALL NUTS, BOLTS, SCREWS AND HINGES SHALL BE STAINLESS STEEL.
4. NUTS, BOLTS & SCREWS ARE NOT USED ON THE OUTSIDE PEDESTAL.
5. PHENOLIC NAMEPLATES TO IDENTIFY ALL OPERATOR CONTROLS.
6. CONTROL WIRING WILL BE MARKED AT BOTH ENDS BY PERMANENT WIRE MARKERS.
7. A PLASTIC COVERED WIRING DIAGRAM WILL BE ATTACHED TO THE INSIDE OF THE FRONT DOOR.
8. PEDESTAL WILL BE FACTORY WIRED AND CONFORM TO REQUIRED NEMA STANDARDS.
9. PEDESTAL(S) WILL BE U.L. LISTED AS INDUSTRIAL CONTROL PANELS, U.L. 508 FILE NO. E62062
10. WIRING BETWEEN CIRCUIT BREAKER AND CONTACTOR SHALL BE A #6 THWN OR THHN MINIMUM.
11. SERVICE SHALL BE OF TWO PIECE CONTRUCTION.
12. SEE STANDARD SPECIFICATIONS FOR ADDITIONAL DETAILS.
13. SERVICE MUST CARRY A NEUTRAL TO STREET LIGHTS FOR 120 OPERATION

REV.	DATE	DESCRIPTION

CITY OF SACRAMENTO
DEPARTMENT OF TRANSPORTATION

METERED SERVICE PEDESTAL

APPR'D BY: Nicholas Thomas NO SCALE

DATE: MAY 2007 DWG. NO. E - 20

R:\Utilstds\City_Std_Details\DOT_Electrical_Details\E-20

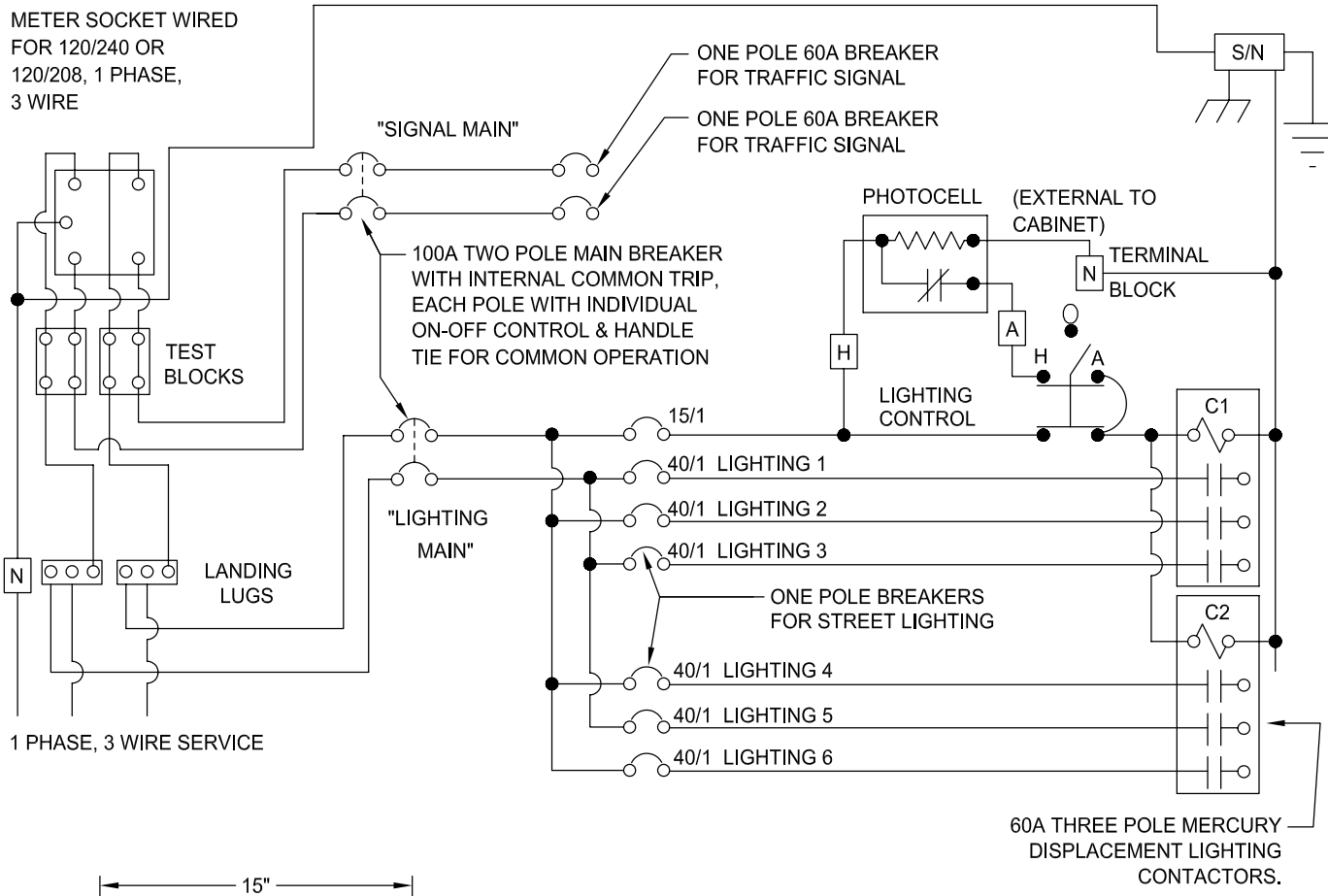

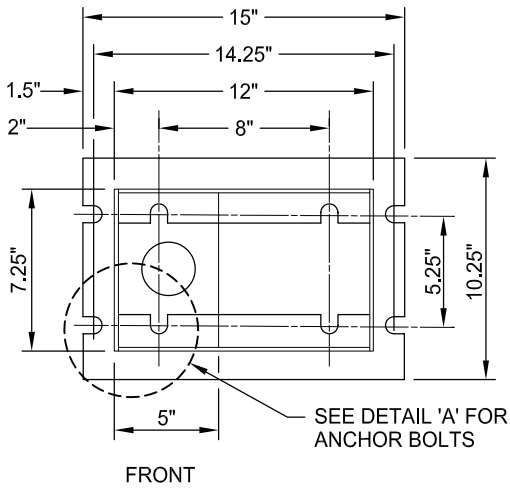

BASE PLATE DETAIL

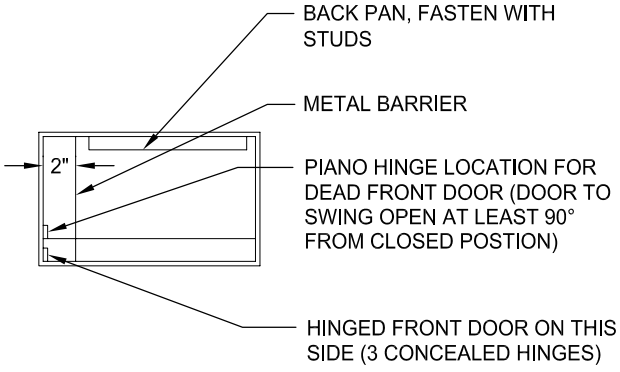

SECTION A-A

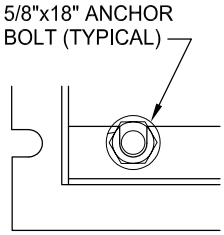

DETAIL 'A'

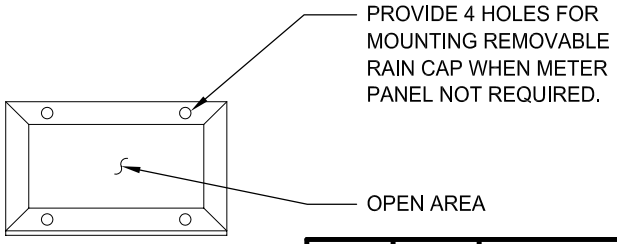

SECTION B-B

REV.	DATE	DESCRIPTION

R:\Utilstds\City_Std_Details\DOT_Electrical_Details\E-30

CITY OF SACRAMENTO
DEPARTMENT OF TRANSPORTATION

METERED SERVICE PEDESTAL

APPR'D BY: Nicholas Thomas NO SCALE
DATE: MAY 2007 DWG. NO. **E - 30**

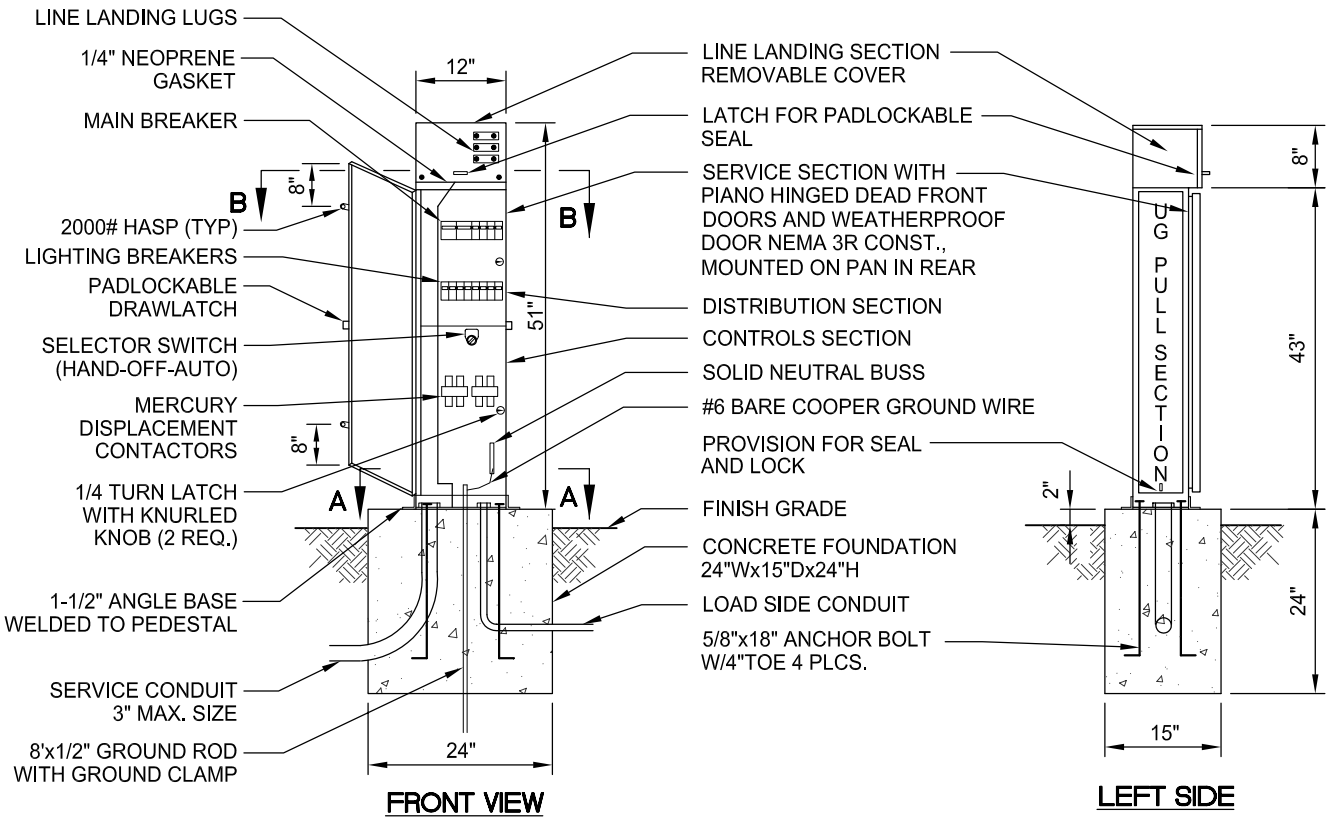

UNMETERED SERVICE PEDESTAL

1. EXTERIOR 14 GAUGE #304D STAINLESS STEEL, INTERIOR DEAD FRONT PANEL & BACK PAN SHALL BE 14 GAUGE STEEL PAINTED WHITE ELECTRICALLY WELDED AND REINFORCED WHERE REQUIRED.
2. CONSTRUCTION IS NEMA 3R AND 12, RAINTIGHT AND DUSTTIGHT.
3. ALL NUTS, BOLTS, SCREWS AND HINGES SHALL BE STAINLESS STEEL.
4. NUTS, BOLTS & SCREWS ARE NOT USED ON THE OUTSIDE PEDESTAL.
5. PHENOLIC NAMEPLATES TO IDENTIFY ALL OPERATOR CONTROLS.
6. CONTROL WIRING WILL BE MARKED AT BOTH ENDS BY PERMANENT WIRE MARKERS.
7. A PLASTIC COVERED WIRING DIAGRAM WILL BE ATTACHED TO THE INSIDE OF THE FRONT DOOR.
8. PEDESTAL WILL BE FACTORY WIRED AND CONFORM TO REQUIRED NEMA STANDARDS.
9. PEDESTAL(S) WILL BE U.L. LISTED AS INDUSTRIAL CONTROL PANELS, U.L. 508 FILE NO. E62062
10. WIRING BETWEEN CIRCUIT BREAKER AND CONTACTOR SHALL BE A #6 THWN OR THHN MINIMUM.
11. SEE STANDARD SPECIFICATIONS FOR ADDITIONAL DETAILS.

REV.	DATE	DESCRIPTION

R:\Utilstds\City_Std_Details\DOT_Electrical_Details\E-40

CITY OF SACRAMENTO DEPARTMENT OF TRANSPORTATION	UNMETERED SERVICE PEDESTAL	APPR'D BY: Nicholas Hernandez NO SCALE DATE: MAY 2007 DWG. NO. EE - 40

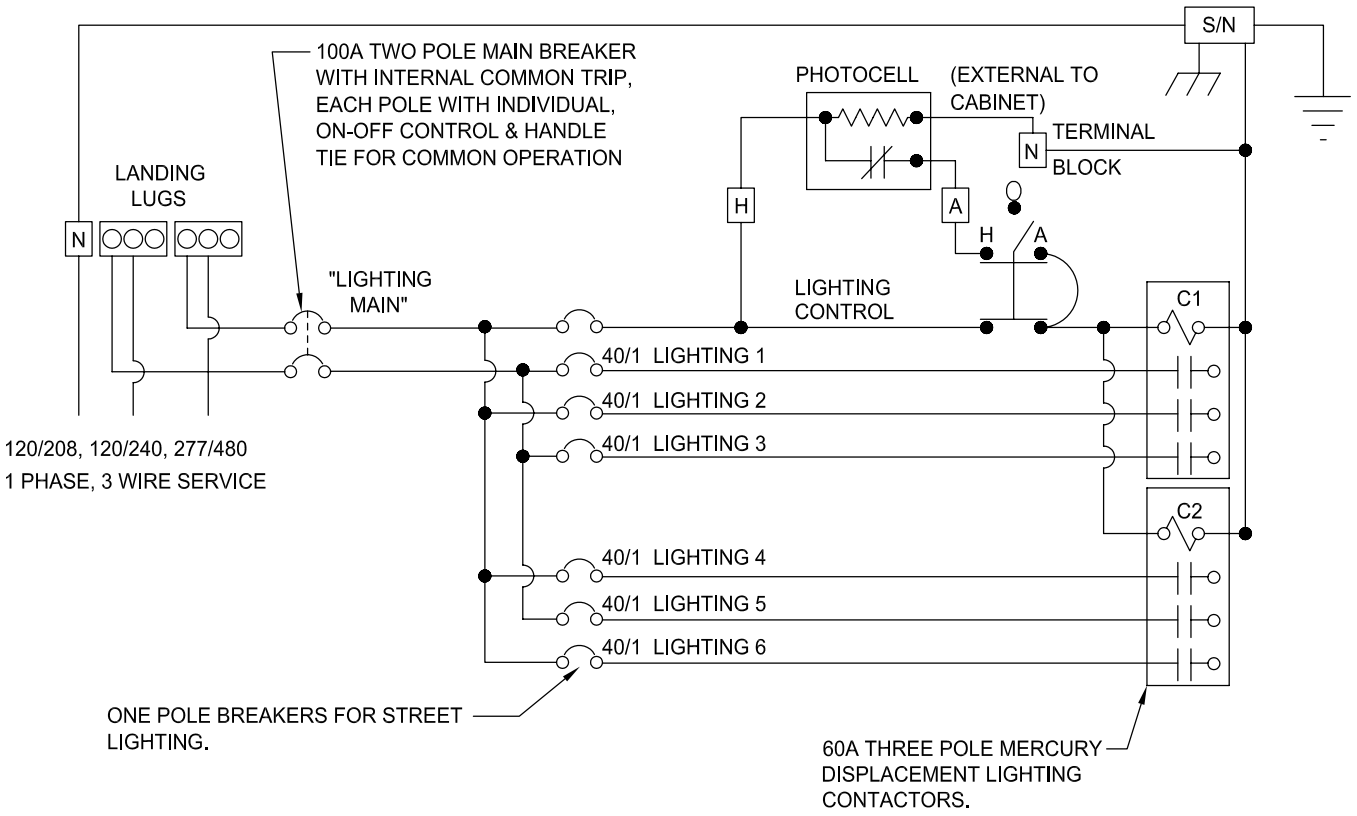

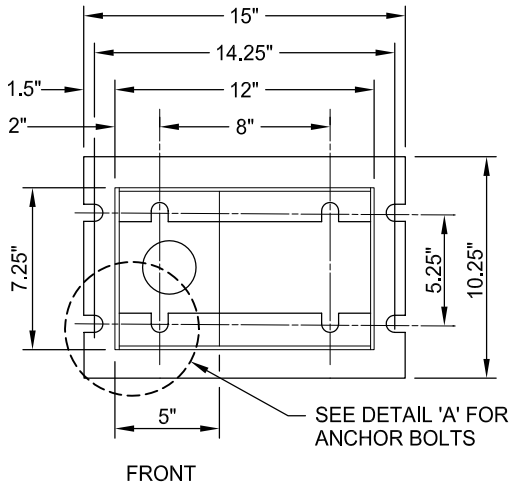

BASE PLATE DETAIL

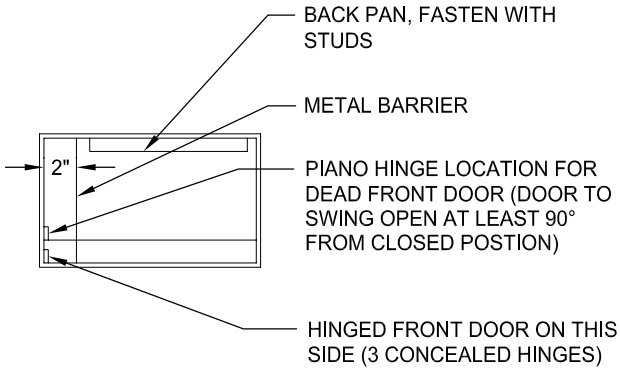

SECTION A-A

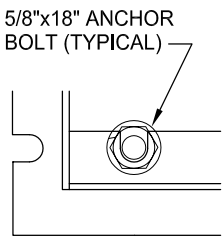

DETAIL 'A'

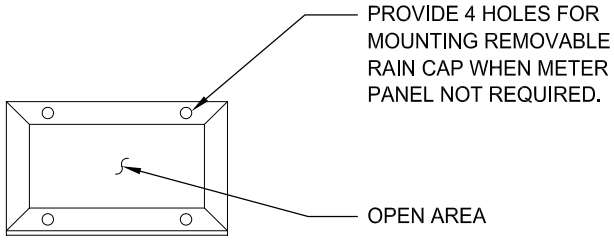

SECTION B-B

REV.	DATE	DESCRIPTION

CITY OF SACRAMENTO
DEPARTMENT OF TRANSPORTATION

UNMETERED SERVICE PEDESTAL

APPR'D BY: Nicholas Hernandez NO SCALE
DATE: MAY 2007 DWG. NO. E - 50

R:\Utilstds\City_Std_Details\DOT_Electrical_Details\E-50

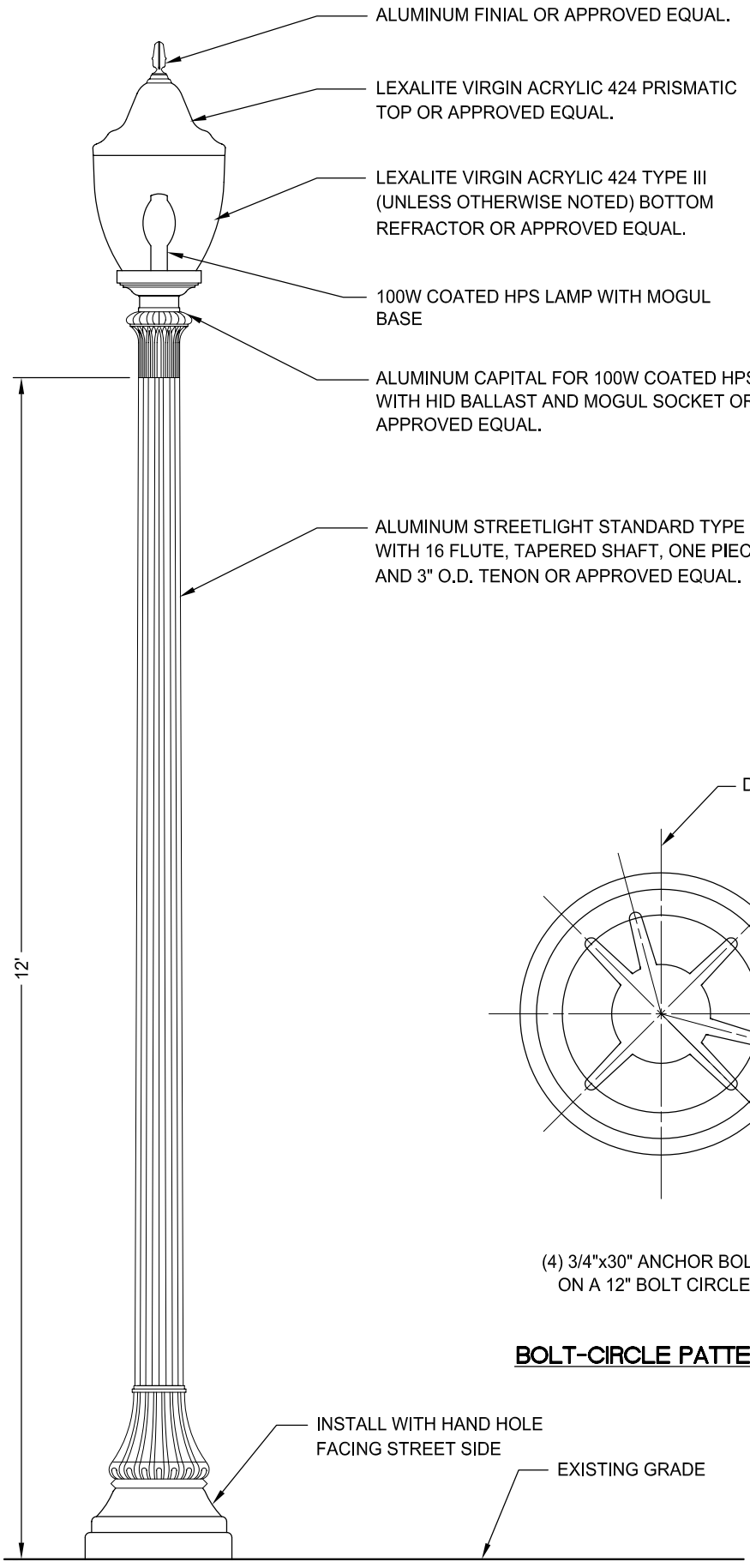

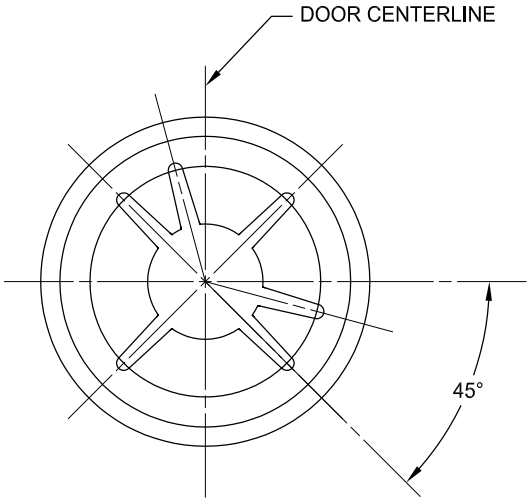

(4) 3/4"x30" ANCHOR BOLTS
ON A 12" BOLT CIRCLE

BOLT-CIRCLE PATTERN

REV.	DATE	DESCRIPTION

CITY OF SACRAMENTO
DEPARTMENT OF TRANSPORTATION

ORNAMENTAL STREET LIGHT STYLE I

APPR'D BY: Nicholas Hendricks NO SCALE
DATE: MAY 2007 DWG. NO. **E - 60**

R:\Utilstds\City_Std_Details\DOT_Electrical_Details\E-60

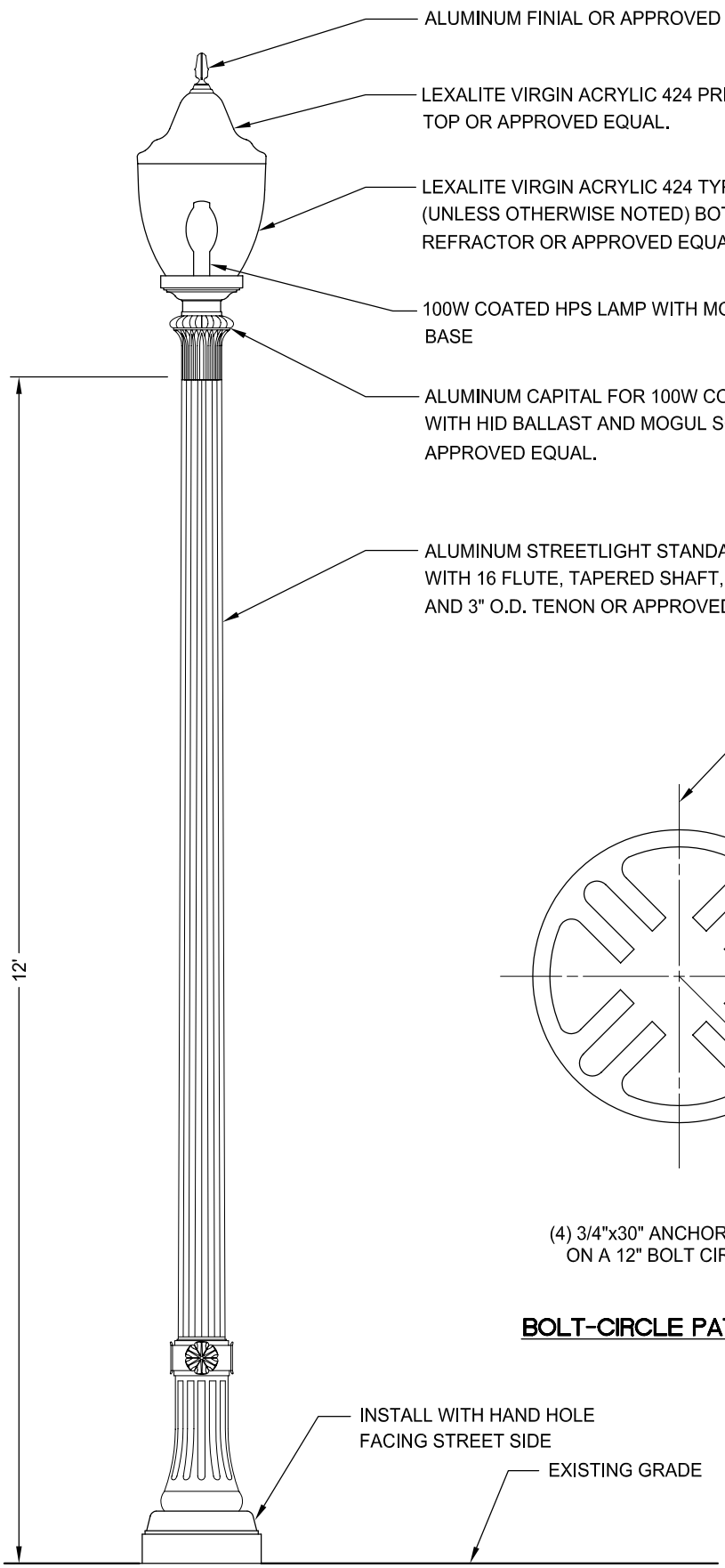

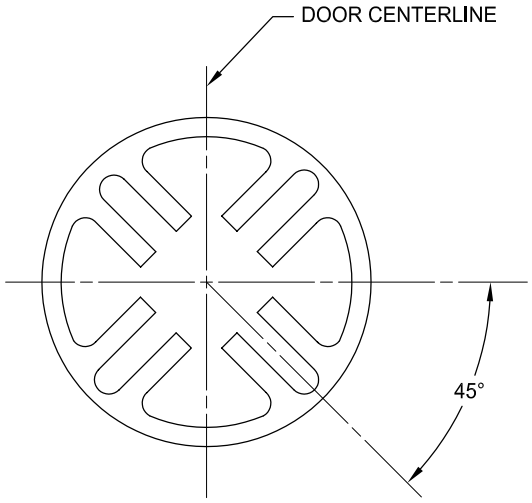

(4) 3/4"x30" ANCHOR BOLTS
ON A 12" BOLT CIRCLE

BOLT-CIRCLE PATTERN

REV.	DATE	DESCRIPTION

CITY OF SACRAMENTO
DEPARTMENT OF TRANSPORTATION

ORNAMENTAL
STREET LIGHT STYLE II

APPR'D BY: Nicholas Hernandez NO SCALE
DATE: MAY 2007 DWG. NO. E - 70

R:\Utilstds\City_Std_Details\DOT_Electrical_Details\E-70

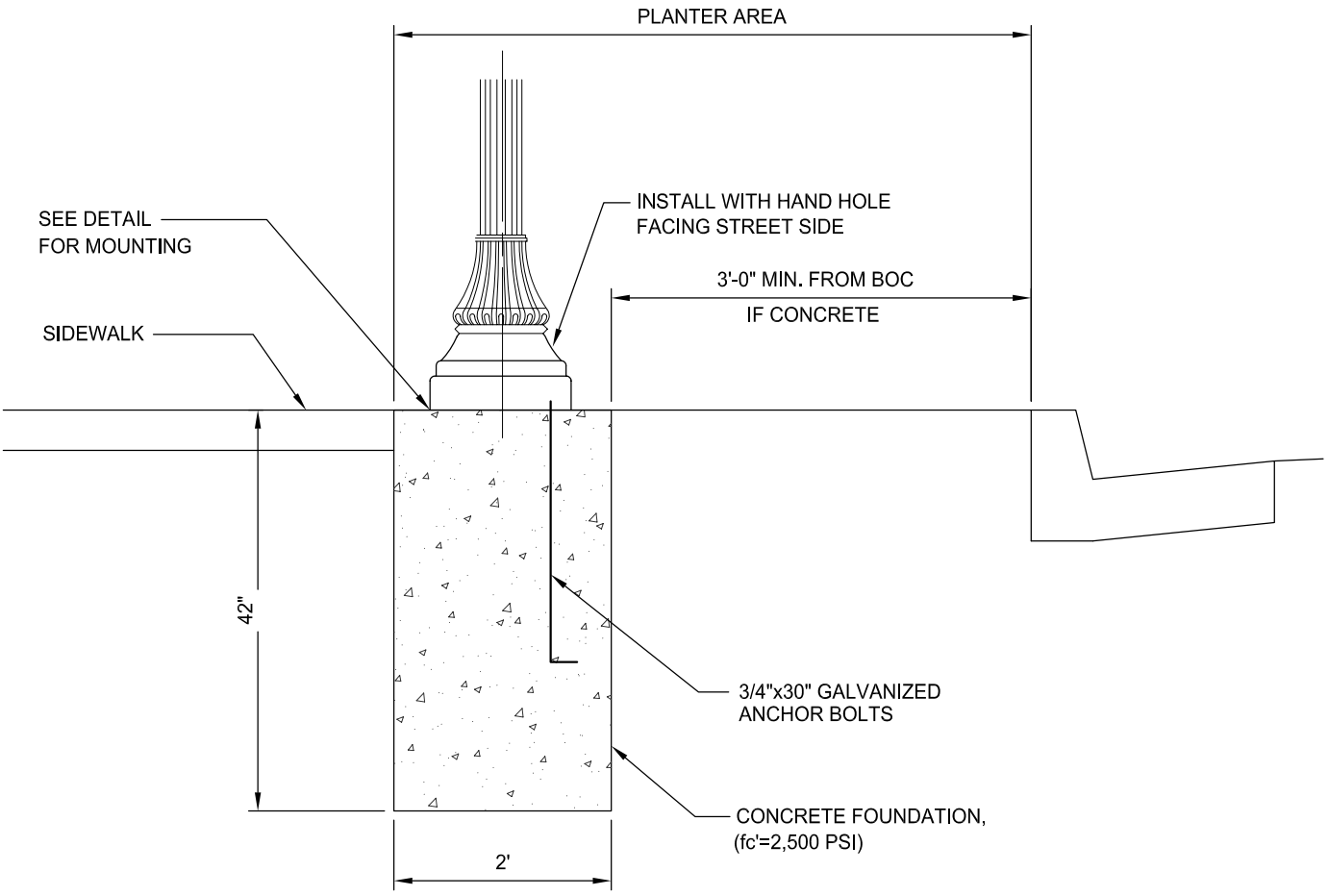

STREETLIGHT IN PLANTER

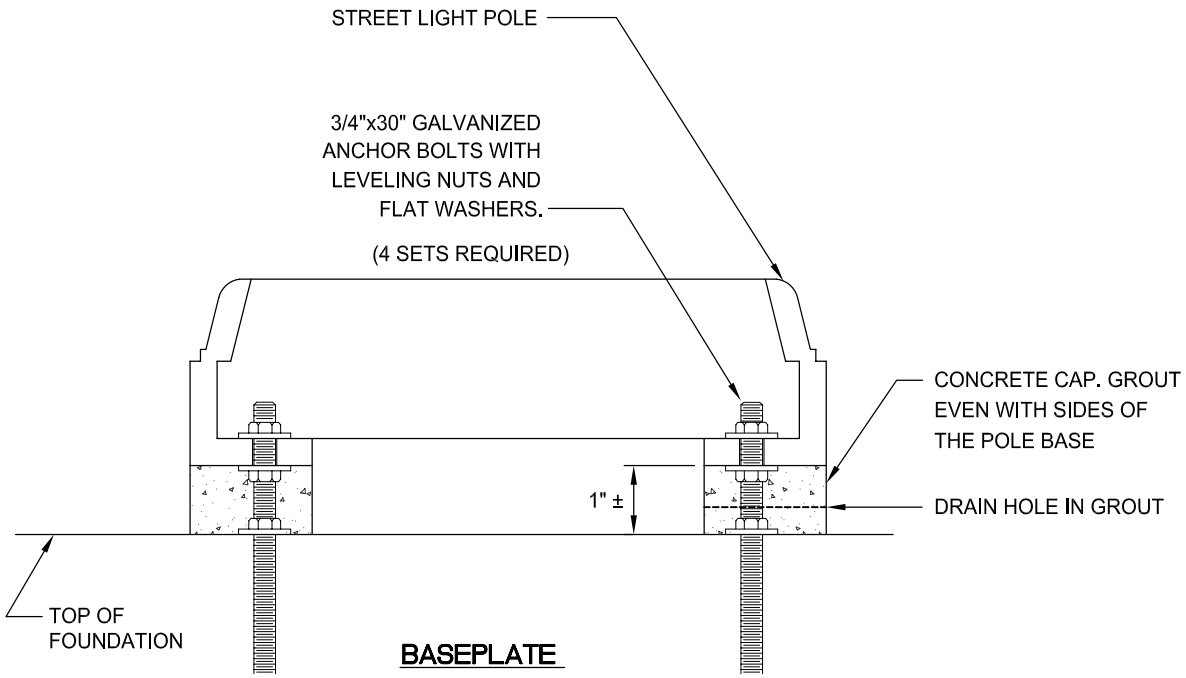

BASEPLATE

REV.	DATE	DESCRIPTION

CITY OF SACRAMENTO
DEPARTMENT OF TRANSPORTATION

ORNAMENTAL
STREETLIGHT DETAILS

APPR'D BY: Nicholas Thomas NO SCALE
DATE: MAY 2007 DWG. NO. E - 80

R:\Utilstds\City_Std_Details\DOT_Electrical_Details\E-80

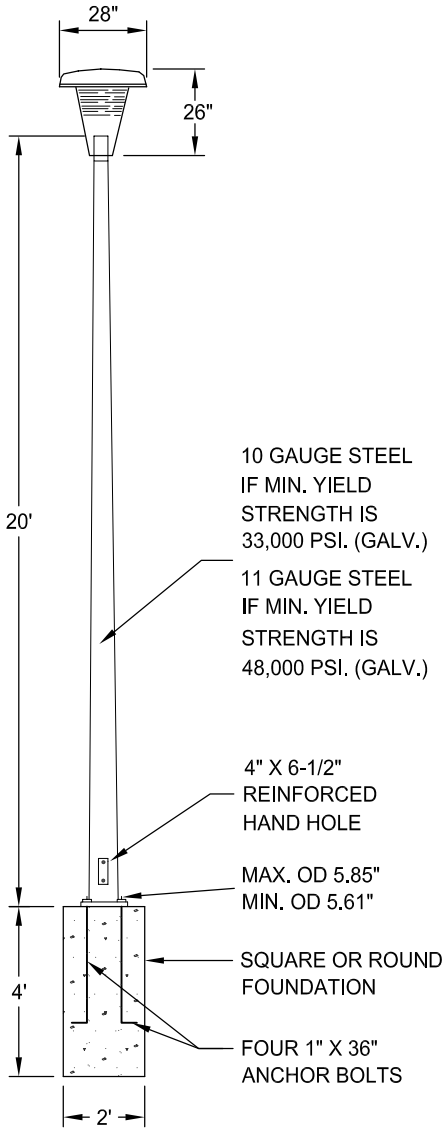

TYPE OF ELECTROLIER	BASE PLATE	
	A	B
POST TOP STEEL	10"	9-1/2"

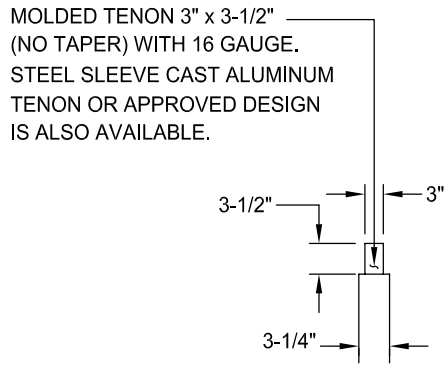

TENON DETAIL

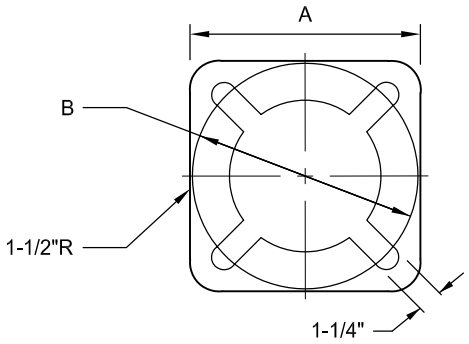

BASE PLATE

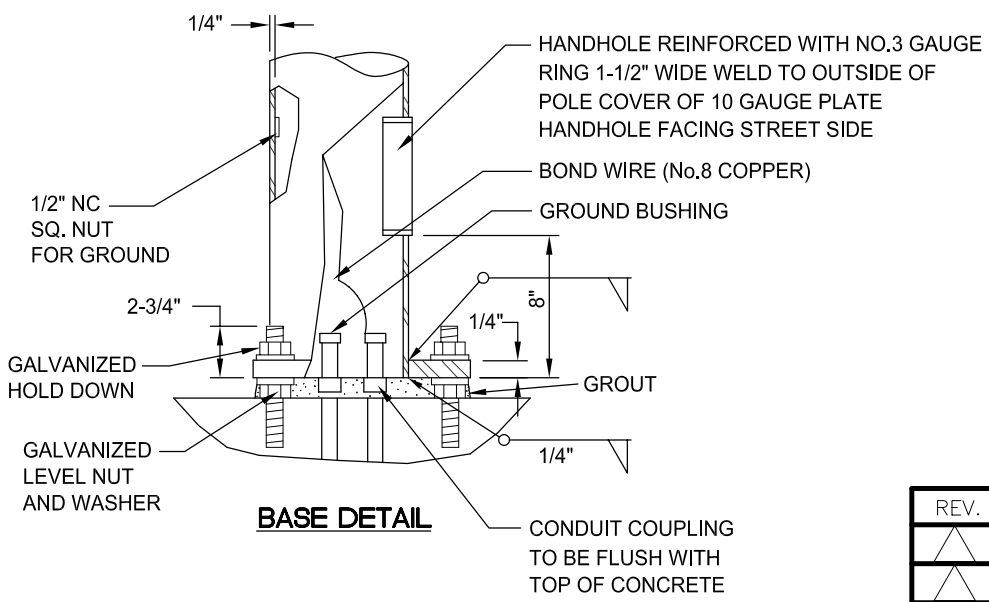

BASE DETAIL

REV.	DATE	DESCRIPTION

R:\Utilstds\City_Std_Details\DOT_Electrical_Details\E-90

CITY OF SACRAMENTO DEPARTMENT OF TRANSPORTATION	POST TOP LUMINAIRES AND DETAILS	APPR'D BY: Nicholas Theodosiou NO SCALE DATE: MAY 2007 DWG. NO. E - 90

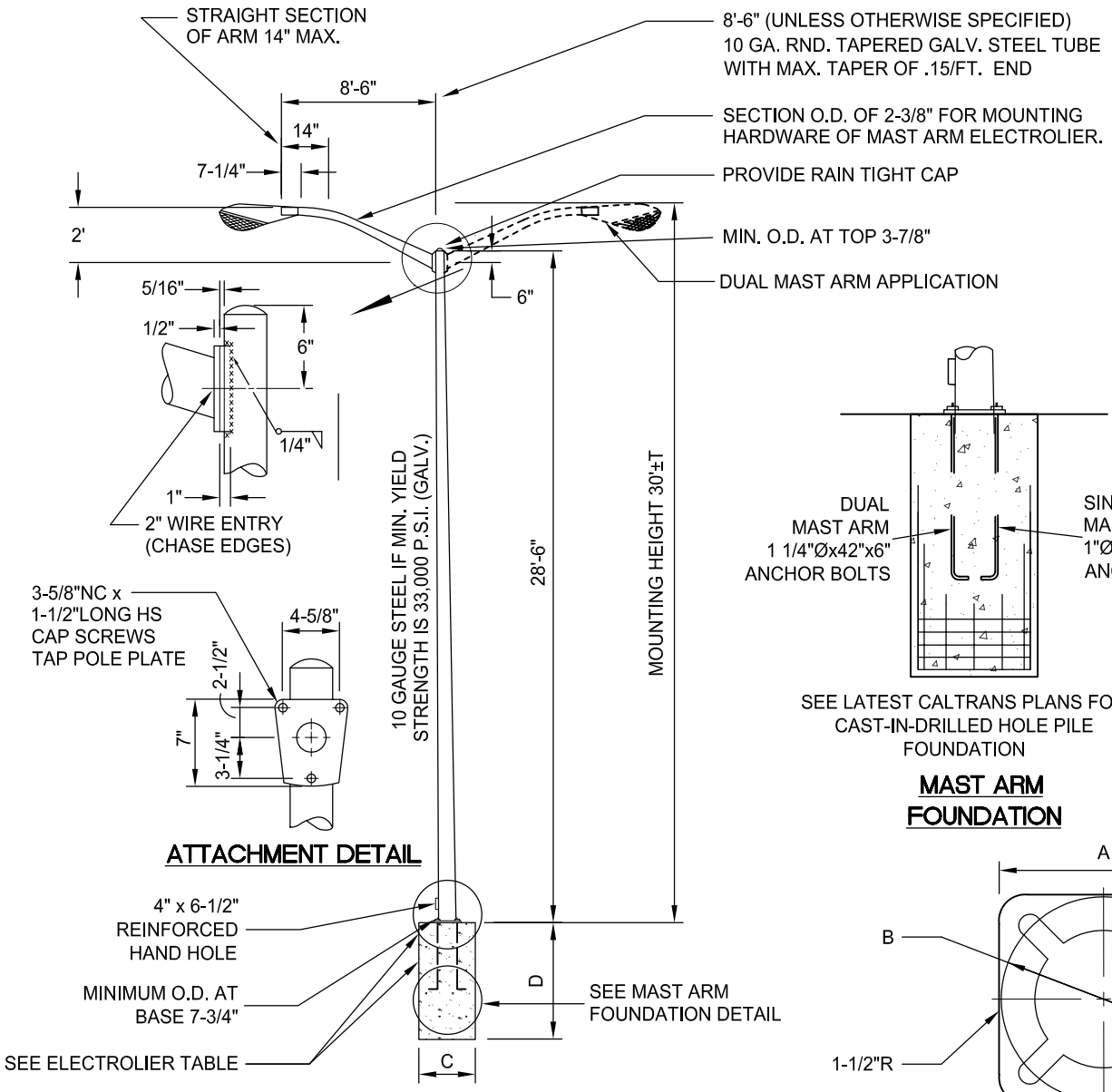

TYPE OF ELECTROLIER	BASE PLATE			BASE PLATE	
	A	B	T	C	D
MAST ARM	11-1/2"	11"	1"	30"	5'
DUAL MAST ARM	12"	12"	1"	30"	7.2'

REV.	DATE	DESCRIPTION

R:\Utilstds\City_Std_Details\DOT_Electrical_Details\E-100

CITY OF SACRAMENTO
DEPARTMENT OF TRANSPORTATION

MAST ARM LUMINAIRE AND DETAILS

APPR'D BY: Nicholas Hendricks NO SCALE
DATE: MAY 2007 DWG. NO. E - 100

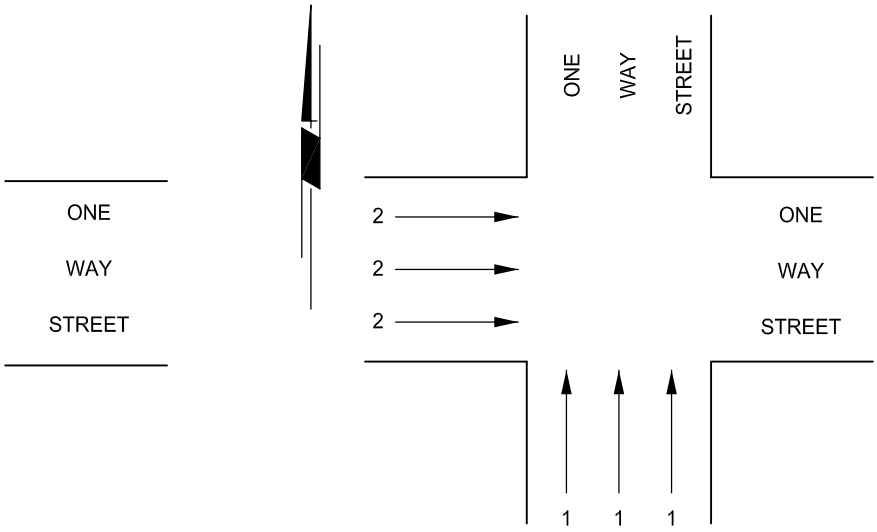

2 PHASE

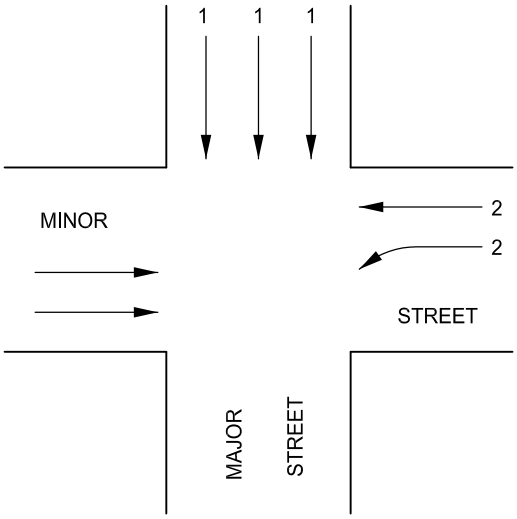

2 PHASE

EXISTING	FUTURE	
PHASE	DIRECTION	PHASE
ØA	EAST/WEST	Ø2
ØB	NORTH/SOUTH	Ø1 OR Ø4

MANY 2 PHASE FIXED TIME ARE TYPE 390'S WITH
Ø1 AS MAJOR DIRECTION AND Ø2 AS MINOR DIRECTION

REV.	DATE	DESCRIPTION

CITY OF SACRAMENTO
DEPARTMENT OF TRANSPORTATION

TYPICAL FIXED-TIMED
SIGNAL PHASING

APPR'D BY: Nicholas Thomas NO SCALE
DATE: MAY 2007 DWG. NO. EE - 110

R:\Utilstds\City_Std_Details\DOT_Electrical_Details\E-110

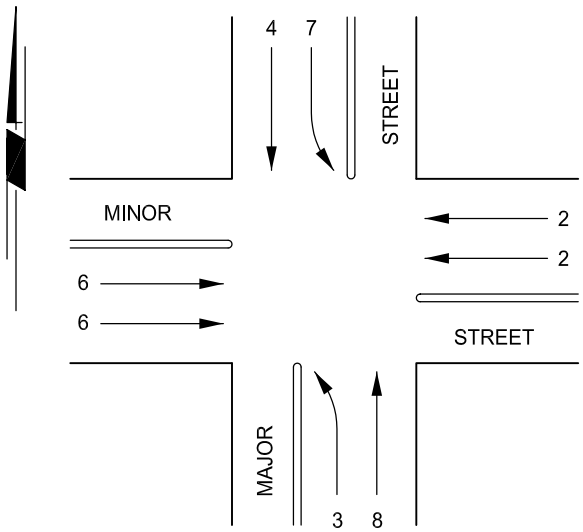

6 PHASE

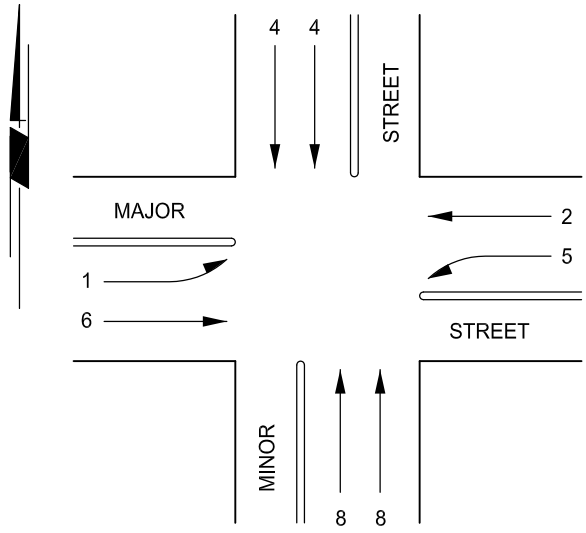

6 PHASE

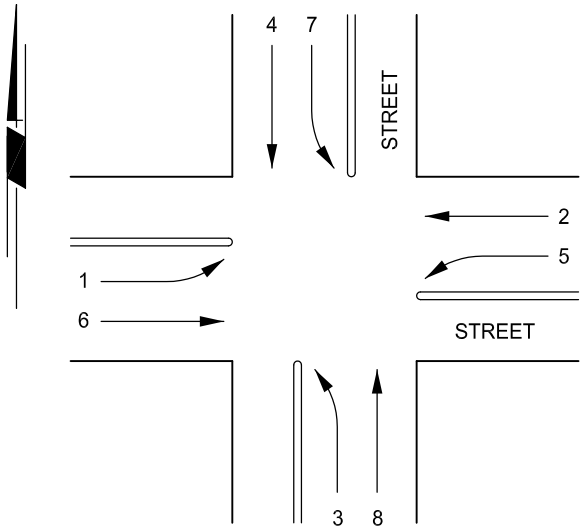

8 PHASE

R:\Utilstds\City_Std_Details\DOT_Electrical_Details\E-120

REV.	DATE	DESCRIPTION

CITY OF SACRAMENTO DEPARTMENT OF TRANSPORTATION	TYPICAL 6 AND 8 SIGNAL PHASING	APPR'D BY: Nicholas Thomas NO SCALE DATE: MAY 2007 DWG. NO. E - 120

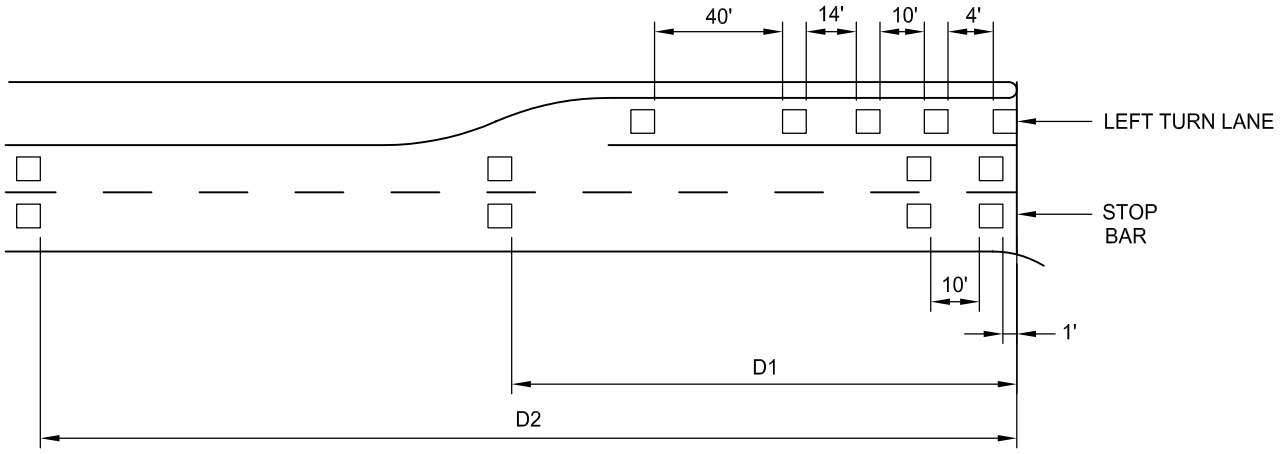

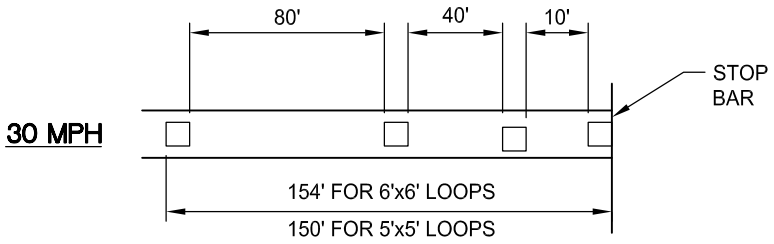

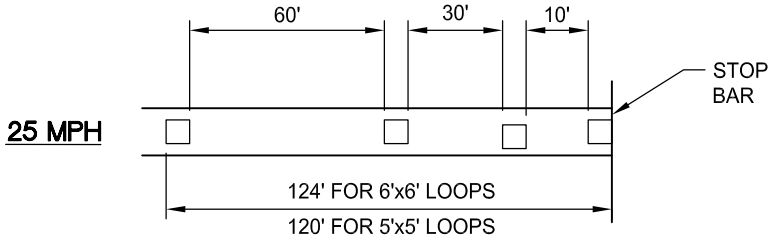

MINOR STREET LOOP DISTANCES

5 SEC RULE LOOP DISTANCE		
MPH	D1	D2
*25	95'	185'
*30	110'	220'
35	130'	260'
40	150'	300'
45	165'	330'
50	185'	370'
55	200'	405'
60	220'	440'

'*' INDICATES DISTANCES TO BE USED IF 25 AND 30 MPH STREETS ARE MAIN STREETS. IF NOT MAIN STREETS, SEE "MINOR STREET LOOP DISTANCE" DETAIL ON THIS SHEET.

NOTES:

1. NOMINAL LOOP SIZE TO BE 6'x6'. IF LANE WIDTH IS 11' OR LESS LOOP SIZE TO BE 5'X5'.

2. DRIVEWAYS WITH LOWER APPROACH SPEEDS MAY USED LESS DISTANCE TO BACK MOST LOOP LOCATION.

REV.	DATE	DESCRIPTION

CITY OF SACRAMENTO
DEPARTMENT OF TRANSPORTATION

TYPICAL DETECTOR LOOP LAYOUT

APPR'D BY: Nicholas Thomas NO SCALE
DATE: MAY 2007 DWG. NO. E - 130

R:\Utilstds\City_Std_Details\DOT_Electrical_Details\E-130

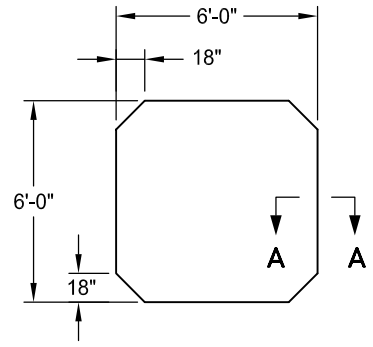

LOOPS SHALL BE 5'X5'
FOR LANE WIDTH LESS
THAN OR EQUAL TO 11',
UNLESS OTHERWISE SPECIFIED.

5' X 5' LOOP

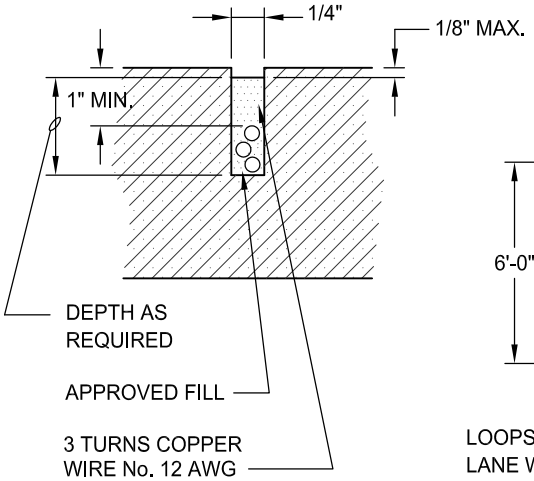

SECTION A-A

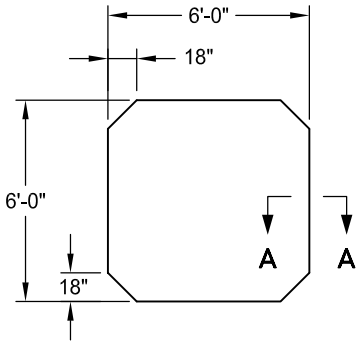

LOOPS SHALL BE 6'X6' FOR
LANE WIDTH GREATER THAN 11',
UNLESS OTHERWISE SPECIFIED.

6' X 6' LOOP

LOOP WINDING PATTERNS

1. LOOP DETECTOR INSTALLATION SHALL CONFORM TO THE LATEST ADOPTED VERSION OF THE TRAFFIC SIGNAL AND HIGHWAY LIGHTING INSTALLATION DETAILS ES-5A STATE OF CALIFORNIA DEPARTMENT OF TRANSPORTATION. UNLESS OTHERWISE INDICATED.

2. THE CONDUCTOR FOR EACH INDUCTIVE DETECTOR LOOP SHALL BE CONTINUOUS, UNSPLICED, TYPE RHW-USE NEOPRENE JACKED OR TYPE USE CROSS-LINKED POLYETHYLENE INSULATED No. 12. STRANDED COPPER WIRE WITH A MINIMUM INSULATION THICKNESS OF 45 MILS.

3. THE LOOP DETECTOR LEAD IN CABLE FROM THE PULL BOX ADJACENT TO THE DETECTOR LOOPS TO THE CONTROLLER SHALL BE CONTINUOUS WITH NO SPLICES. DETECTOR CABLE SHALL BE SHIELDED, TWO TWISTED PAIR No. 18 CANOGA TYPE 30005 OR APPROVED EQUAL.

4. ALL DETECTOR LOOP SPLICES SHALL BE MADE IN THE ASSOCIATED PULL BOX AND ALL LEADS SHALL BE TAGGED.

5. INSULATION RESISTANCE TO GROUND SHALL BE GREATER 200 MEGAOHMS.

6. FOR TYPE C VEHICLE DETECTORS, EACH TURN (LAYER) SHALL BE TERMINATED AND SPLICED IN THE TERMINATION PULL BOX OR HANDHOLE IF SPECIFIED.

7. HANDHOLES SHALL BE INSTALLED AT LOCATIONS AS DESIGNATED BY THE ENGINEER.

REV.	DATE	DESCRIPTION

CITY OF SACRAMENTO DEPARTMENT OF TRANSPORTATION	LOOP SAW CUTTING	APPR'D BY: Nicholas Thomas NO SCALE DATE: MAY 2007 DWG. NO. E - 140

R:\Utilstds\City_Std_Details\DOT_Electrical_Details\E-140

TYPE 'B' DETECTOR HANDHOLE INSTALLATION REQUIREMENTS:

1. OUTLINE OF TRENCH SHALL BE SAW CUT TO A MINIMUM DEPTH OF 3" EXCEPT WHERE AC OVERLAY IS TO BE PLACED.
2. THE PRECAST VALVE BOX WITH CAST IRON LID SHALL BE FABRICATED OF CALCIUM CARBONATE AND POLYESTER RESINS WITH FIBERGLASS REINFORCING AND DESIGNED FOR HEAVY TRAFFIC LOADS.
3. CAST IRON LID SHALL BE MARKED "DETECTOR" AND SHALL BE SECURED IN PLACE BY APPLYING WATERPROOF SILICONE SEALANT. VALVE BOX SHALL BE CENTERED ON LANE LINE, UNLESS OTHERWISE SHOWN ON THE PLANS.
4. THE EXCAVATION AROUND THE HANDHOLE SHALL BE BACKFILLED WITH P.C.C. EXCEPT THE TOP 2" IN AC SURFACED ROADWAYS SHALL BE BACKFILLED WITH AC.
5. THE HANDHOLE SHALL BE PROTECTED WITH COLD PATCH OR OTHER SUITABLE PROTECTION UNTIL PERMANENT AC BACKFILL IS PLACED.

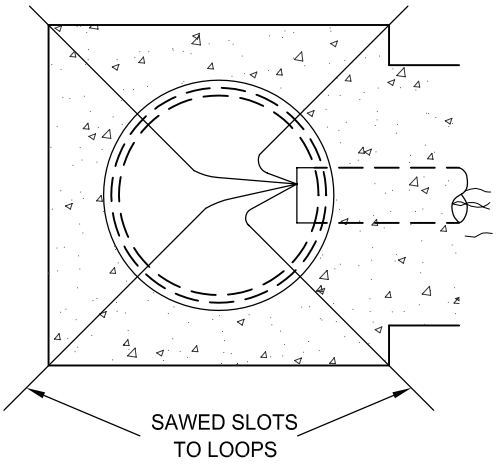

SECTION A-A

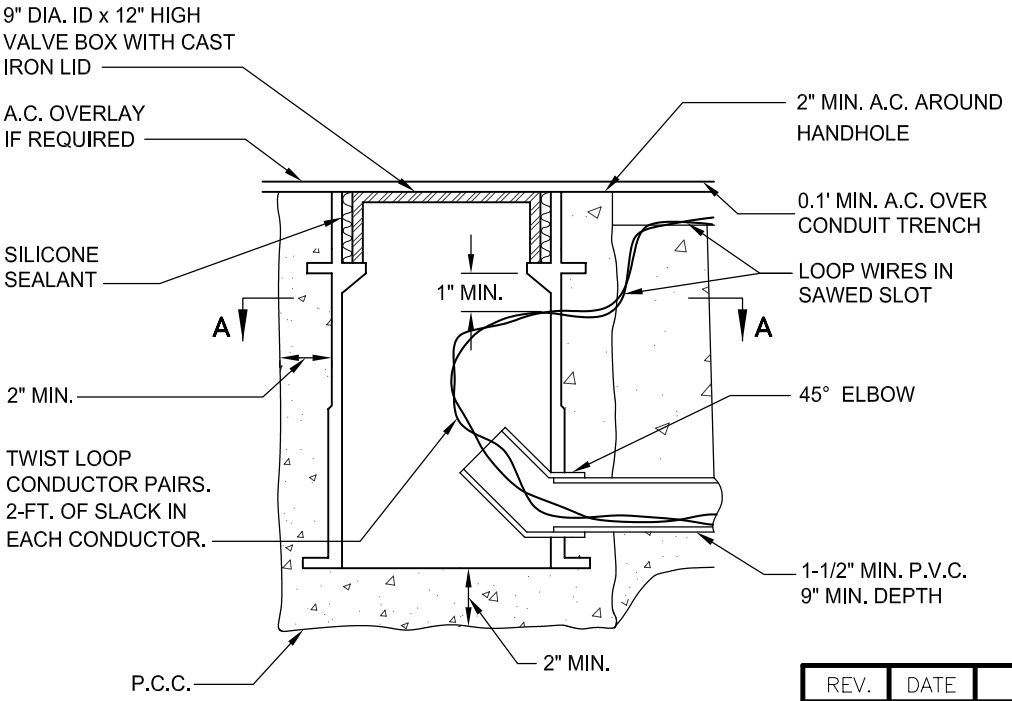

TYPE 'B' DETECTOR

REV.	DATE	DESCRIPTION

CITY OF SACRAMENTO
DEPARTMENT OF TRANSPORTATION

DETECTOR
HANDHOLE

APPR'D BY: Nicholas Thomas NO SCALE
DATE: MAY 2007 DWG. NO. E - 150

R:\Utilstds\City_Std_Details\DOT_Electrical_Details\E-150

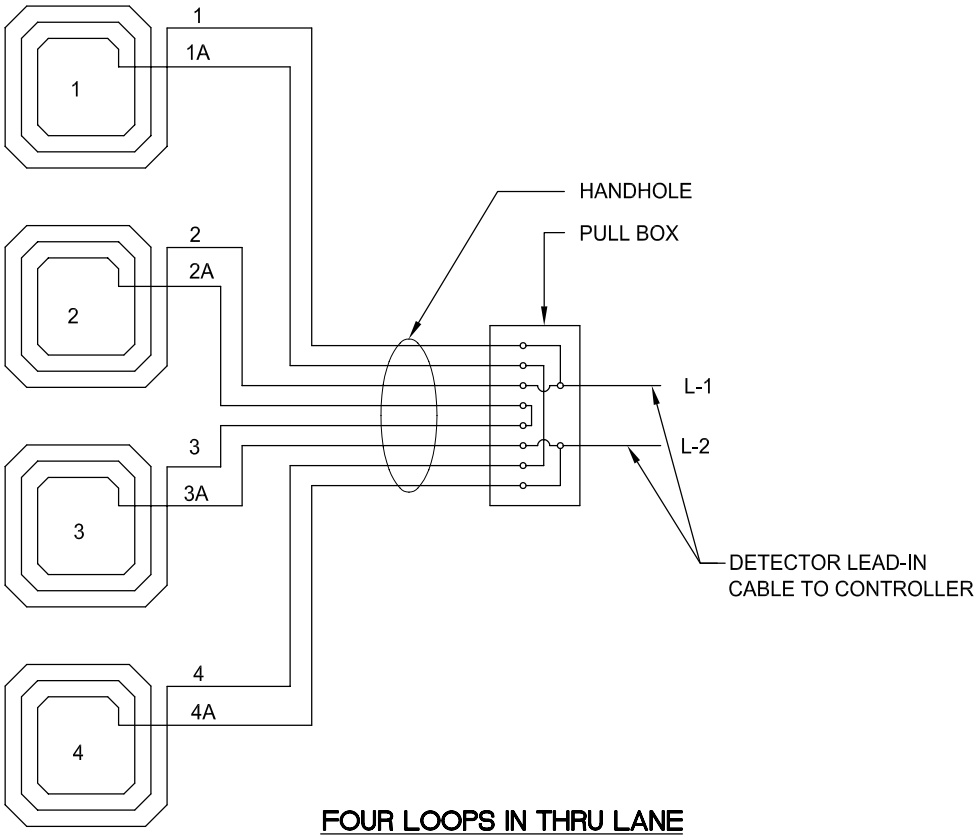

FOUR LOOPS IN THRU LANE

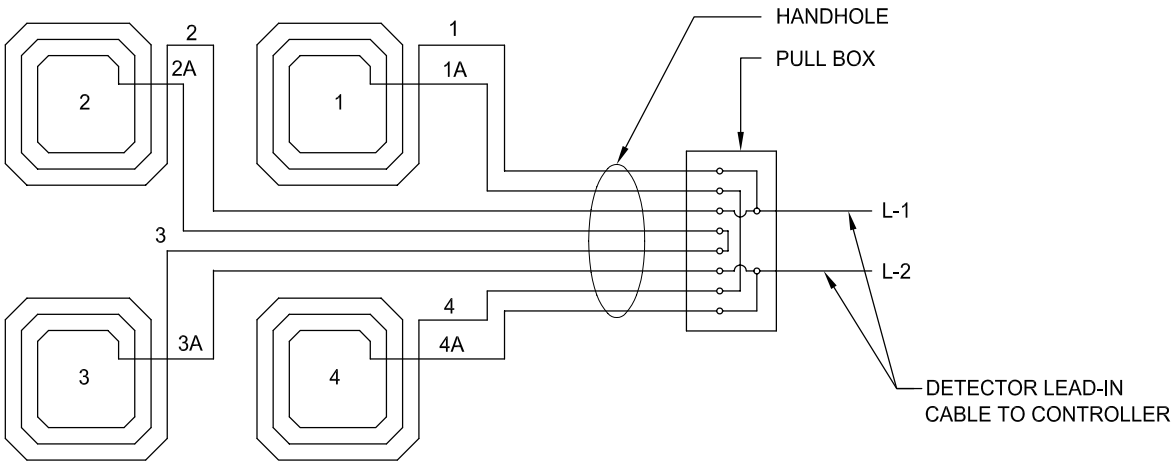

FOUR LOOPS TWO LANES

REV.	DATE	DESCRIPTION

CITY OF SACRAMENTO
DEPARTMENT OF TRANSPORTATION

LOOP WINDING PATTERNS

APPR'D BY: Nicholas Thomas NO SCALE
DATE: MAY 2007 DWG. NO. E - 160

R:\Utilstds\City_Std_Details\DOT_Electrical_Details\E-160

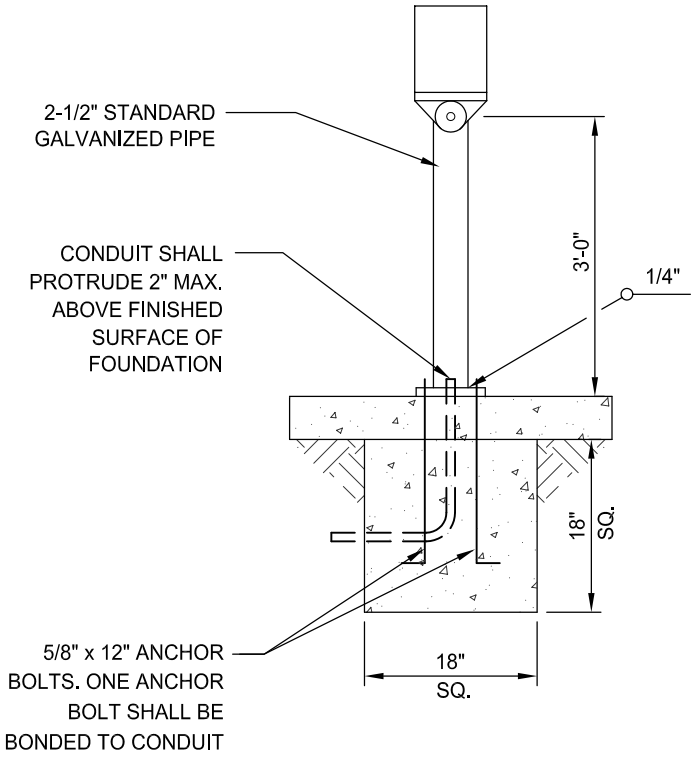

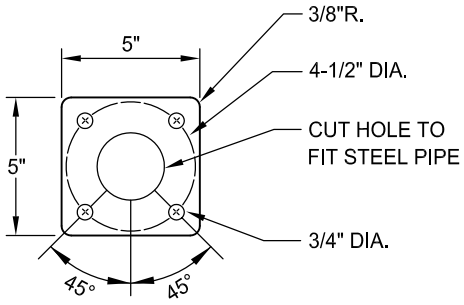

REV.	DATE	DESCRIPTION

CITY OF SACRAMENTO
DEPARTMENT OF TRANSPORTATION

PEDESTRIAN PUSH
BUTTON PLATE & POLE

APPR'D BY: Nicholas Thomas NO SCALE
DATE: MAY 2007 DWG. NO. E - 170

R:\Utilstds\City_Std_Details\DOT_Electrical_Details\E-170

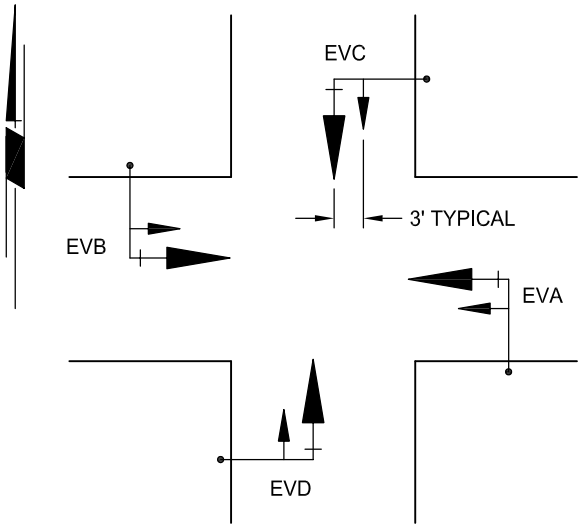

TYPICAL OPTICAL DETECTOR LAYOUT

EV	PHASE	DIRECTION
A	1, 6	EASTBOUND
B	2, 5	WESTBOUND
C	3, 8	NORTHBOUND
D	4, 7	SOUTHBOUND

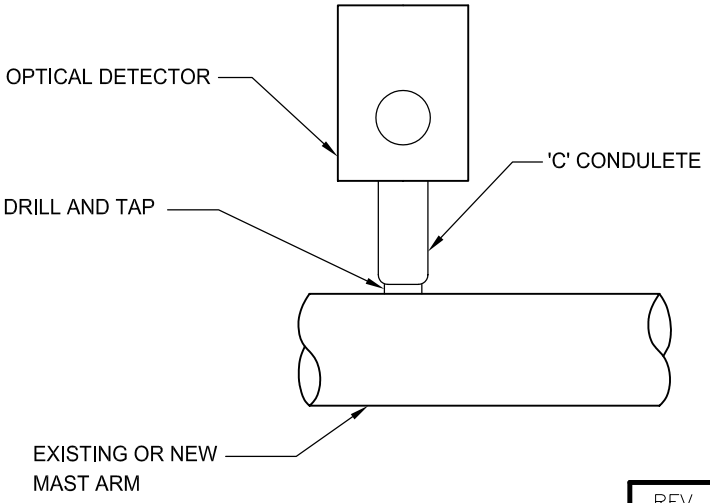

REV.	DATE	DESCRIPTION

R:\Utilstds\City_Std_Details\DOT_Electrical_Details\E-180

CITY OF SACRAMENTO
DEPARTMENT OF TRANSPORTATION

OPTICAL
DETECTOR LAYOUT

APPR'D BY: Nicholas Hernandez NO SCALE
DATE: MAY 2007 DWG. NO. E - 180

EXISTING STREET CONSTRUCTION

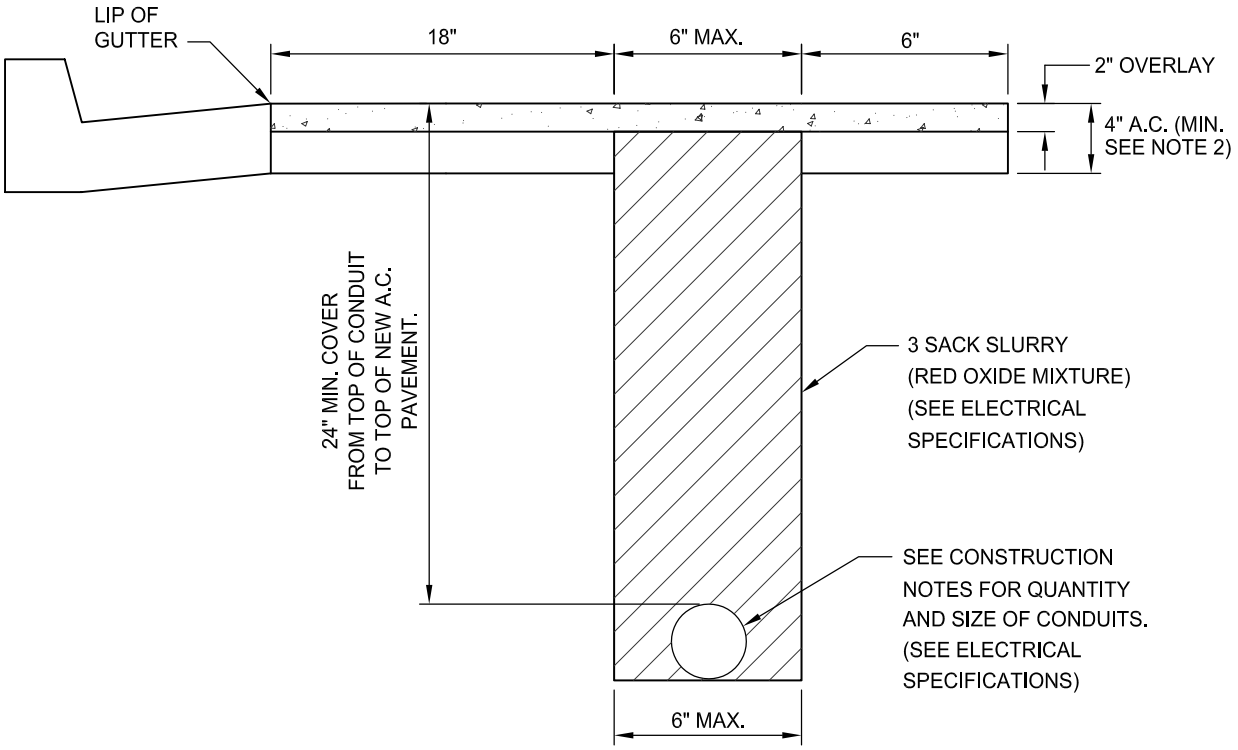

"T" TRENCH

NOTES:

1. 2" OVERLAY FOR STREET WITH 4" AC OR GREATER IN DEPTH.
2. REMOVE AND REPLACE AC AS SHOWN ABOVE, IF AC SECTION IS LESS THAN 4".
3. EXACT LIMITS OF PAVEMENT OVERLAY / REMOVAL / REPLACEMENT TBD BY ENGINEER BASED ON FIELD CONDITIONS.

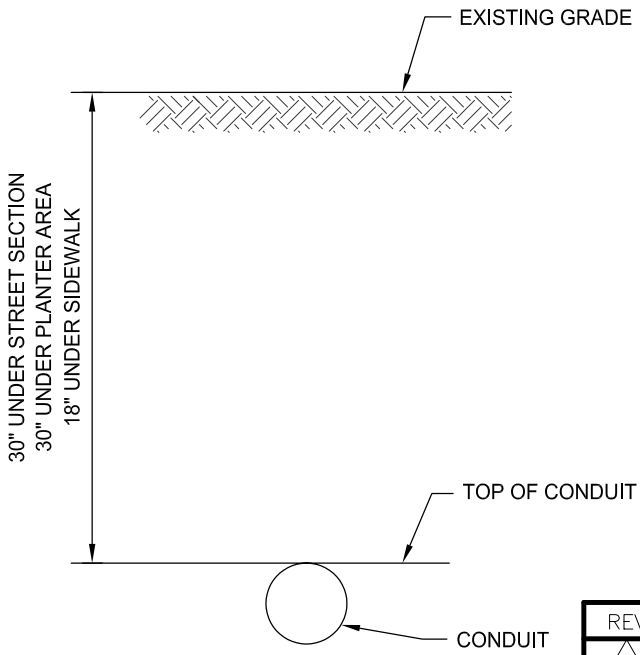

DIRECTION DRILL

REV.	DATE	DESCRIPTION

R:\Utilstds\City_Std_Details\DOT_Electrical_Details\E-190

CITY OF SACRAMENTO
DEPARTMENT OF TRANSPORTATION

"T" TRENCH DETAIL & DIRECTIONAL DRILL

APPR'D BY: Nicholas Hernandez NO SCALE
DATE: MAY 2007 DWG. NO. E - 190

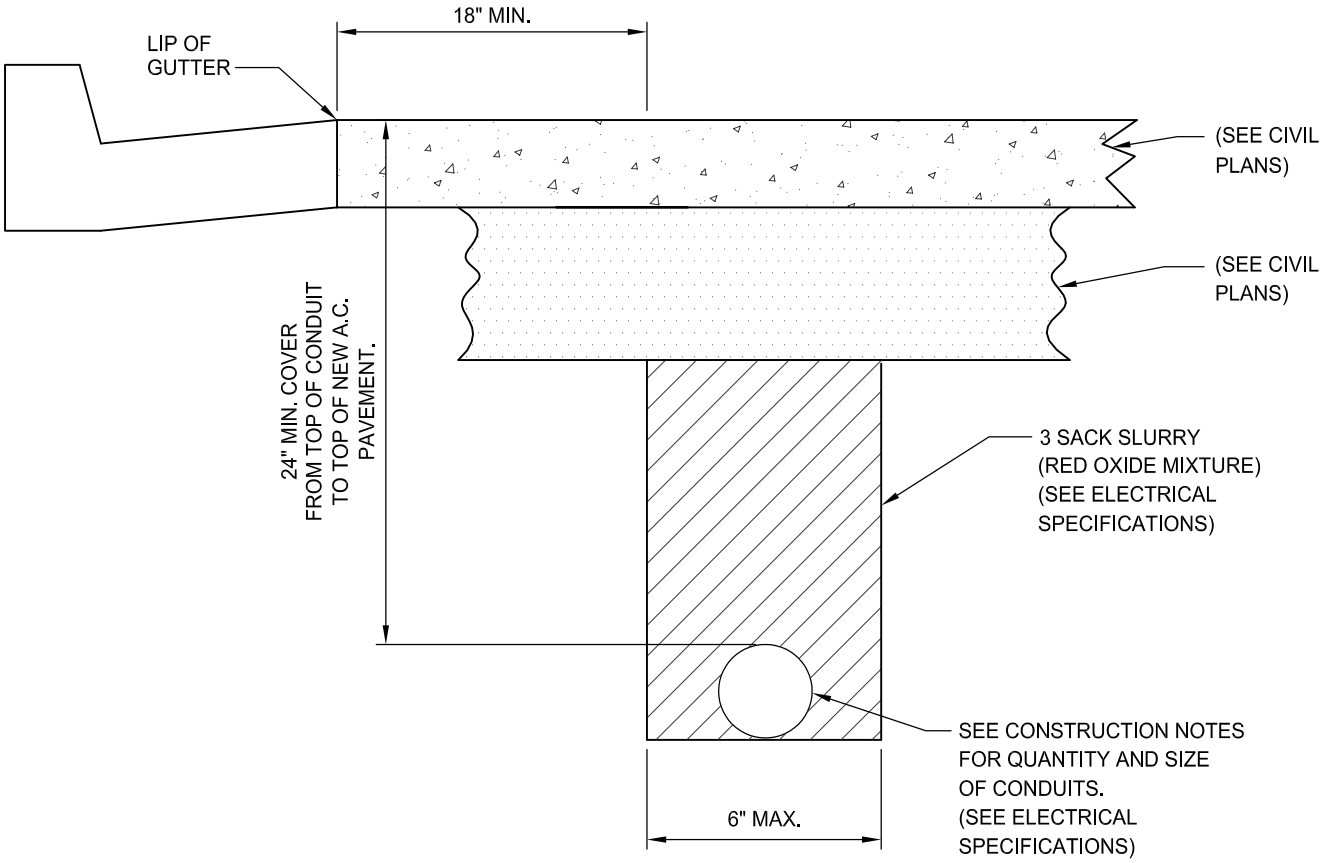

TRENCH

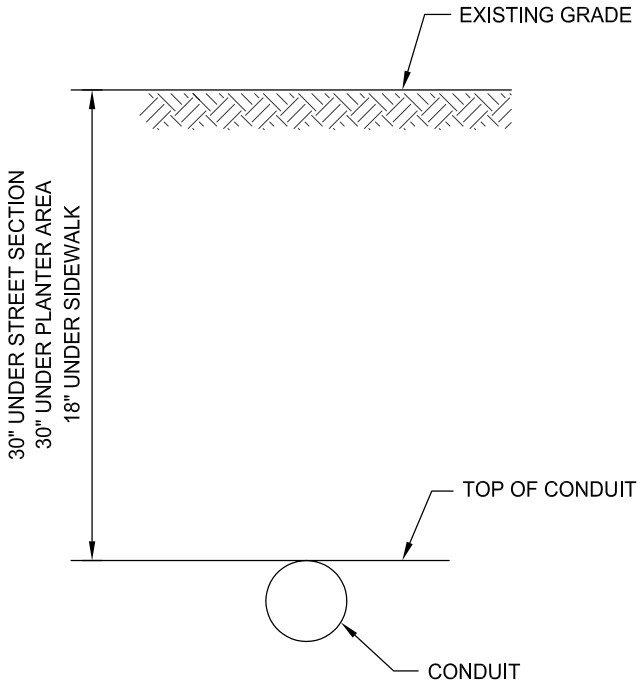

DIRECTION DRILL

REV.	DATE	DESCRIPTION

CITY OF SACRAMENTO
DEPARTMENT OF TRANSPORTATION

TRENCH DETAIL & DIRECTIONAL DRILL

APPR'D BY: Nicholas Hernandez NO SCALE
DATE: MAY 2007 DWG. NO. E - 200

R:\Utilstds\City_Std_Details\DOT_Electrical_Details\E-200

DESCRIPTION = 'STREETLIGHT', 'INTERCONNECT', 'TRAFFIC SIGNAL', 'COMMUNICATION' IN LANDSCAPE OR PLANTA AREA

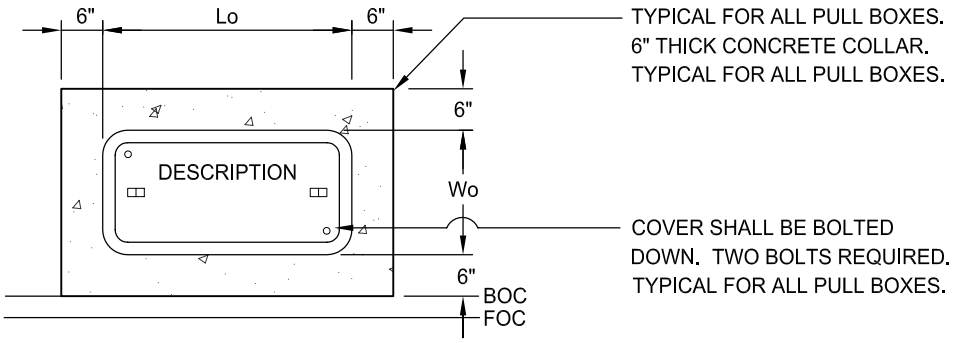

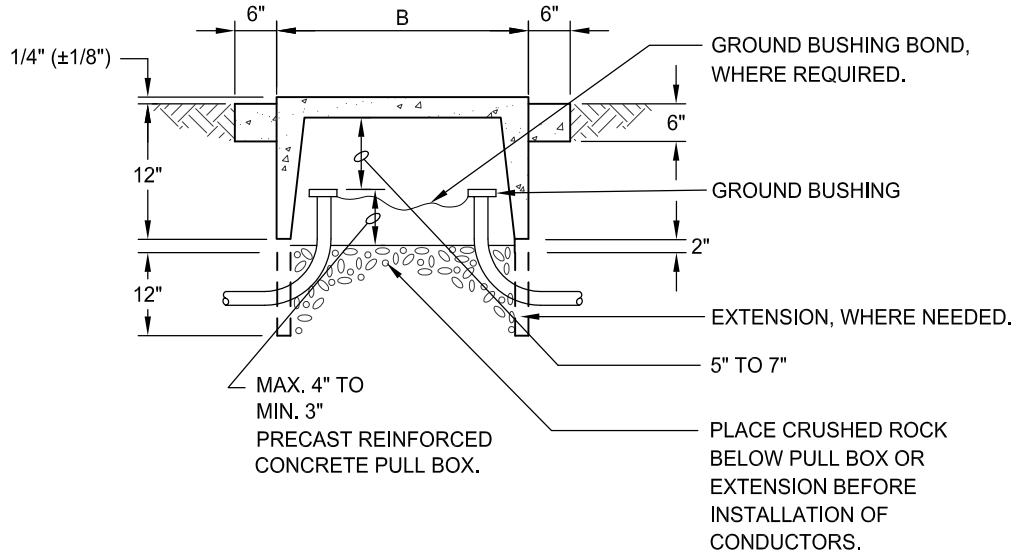

PULL BOX DIMENSIONS		
PULL BOX	Wo	Lo
5	18"	28"
6	23"	36"

REV.	DATE	DESCRIPTION

CITY OF SACRAMENTO
DEPARTMENT OF TRANSPORTATION

CONCRETE PULL BOX

APPR'D BY: Nicholas Thomas NO SCALE
DATE: MAY 2007 DWG. NO. E - 210

R:\Utilstds\City_Std_Details\DOT_Electrical_Details\E-210

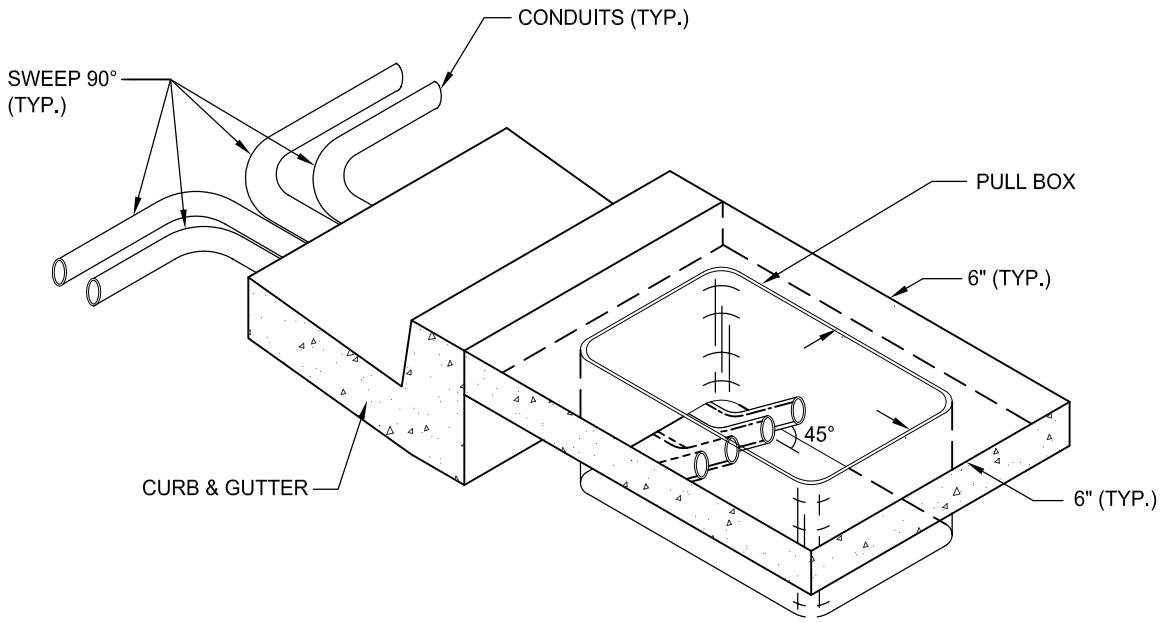

REV.	DATE	DESCRIPTION

CITY OF SACRAMENTO
DEPARTMENT OF TRANSPORTATION

PULL BOX WITH
SWEEP 90°

APPR'D BY: Nicholas Thomas NO SCALE
DATE: MAY 2007 DWG. NO. **E - 220**

R:\Utilstds\City_Std_Details\DOT_Electrical_Details\E-220

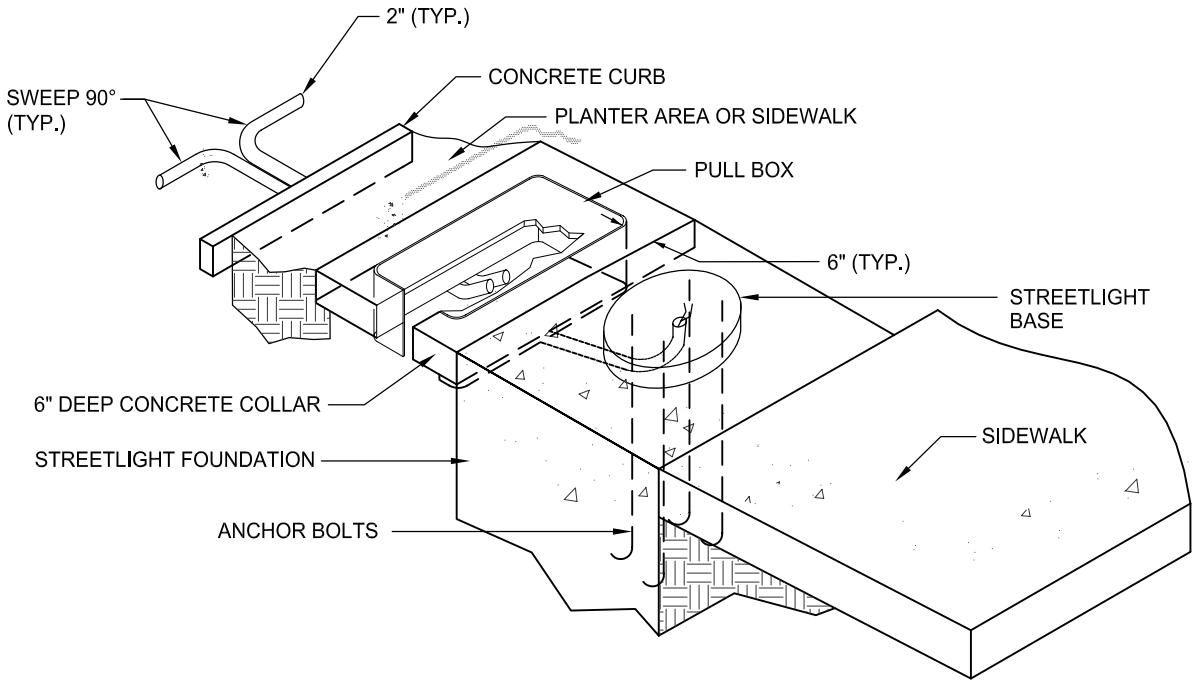

REV.	DATE	DESCRIPTION

CITY OF SACRAMENTO
DEPARTMENT OF TRANSPORTATION

ELECTRICAL EQUIPMENT PLACEMENT

APPR'D BY: Nicholas Thomas NO SCALE

DATE: MAY 2007 DWG. NO. **E - 230**

R:\Utilstds\City_Std_Details\DOT_Electrical_Details\E-230