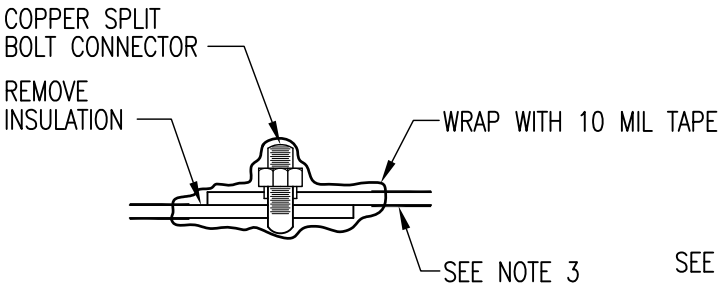

DETAIL OF SPLICE

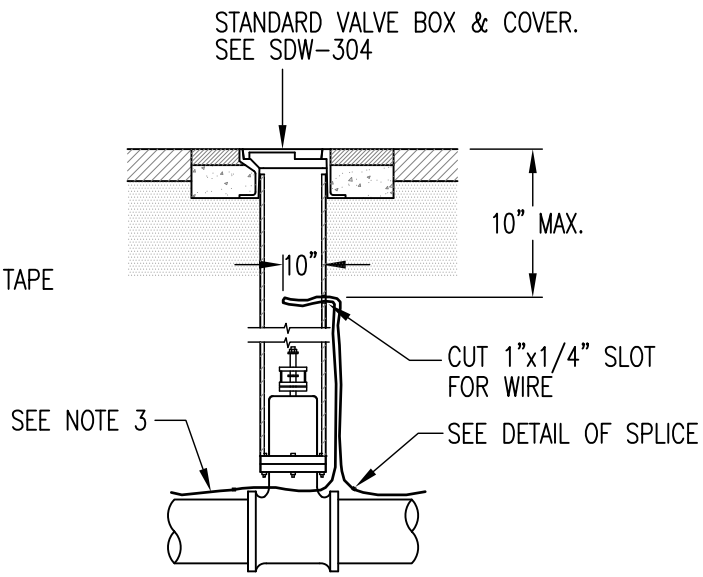

INSTALLATION AT VALVE BOX

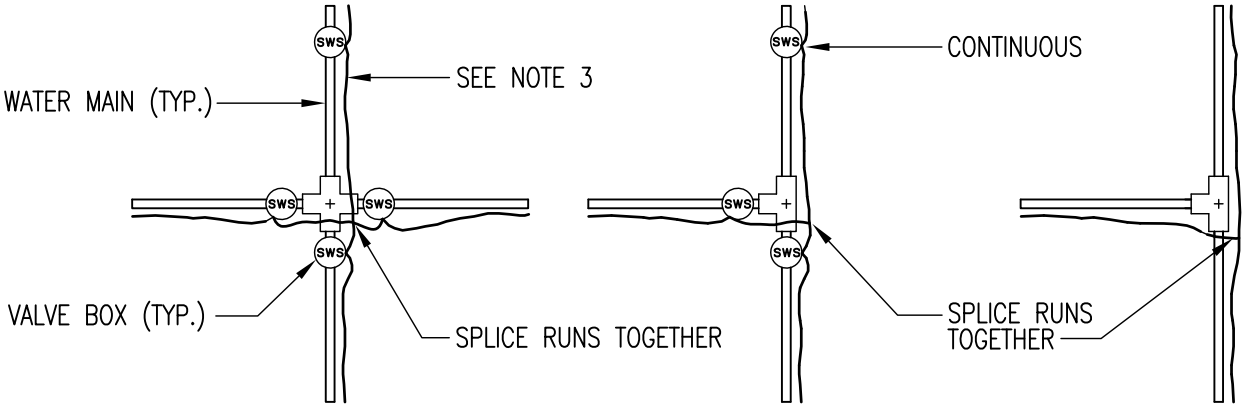

TYPICAL PLACING AT MAIN INTERSECTIONS

NOTES:

1. WIRE TO BE CONTINUOUS BETWEEN VALVE BOXES.
2. TRACER/LOCATOR WIRE TO BE TAPED TO TOP OF PIPE.
3. SOLID NO. 10 COPPER WIRE INSULATED WITH HIGH MOLECULAR WEIGHT POLYETHYLENE (HMWPE) – BLUE COLOR ONLY. (FOR DIRECT BURIAL USE ONLY)

REV.	DATE	DESCRIPTION
△		
△		
△		

CITY OF SACRAMENTO **DEPARTMENT OF UTILITIES**	TRACER/LOCATOR WIRE FOR ALL WATER MAINS	APPR'D BY: Melvin O. Booth NO SCALE DATE: MAY 2007 DWG. NO. **W-102**

R:\Utilstds_New_Std_Details\Water_Utilities\W-102

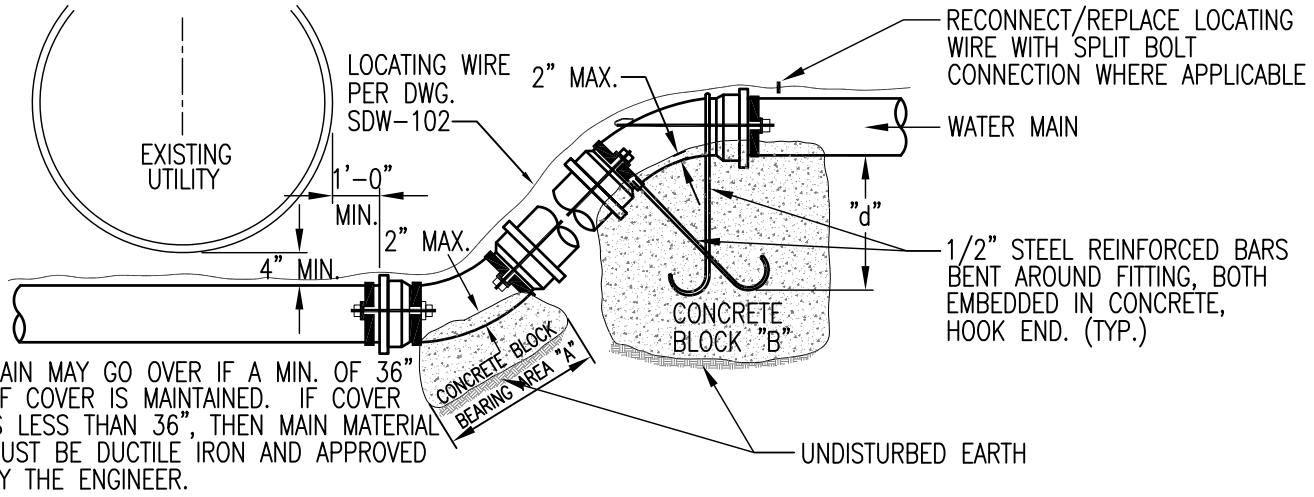

MAIN MAY GO OVER IF A MIN. OF 36" OF COVER IS MAINTAINED. IF COVER IS LESS THAN 36", THEN MAIN MATERIAL MUST BE DUCTILE IRON AND APPROVED BY THE ENGINEER.

SIZE IN PIPE	6"	8"	12"
MINIMUM DEPTH "d"	6"	8"	20"
YDS. CONCRETE NECESSARY TO PROVIDE WEIGHT, BLOCK "B"	0.8	1-1/3	3
BEARING AREA "A" SQ. FT.	2	3	6.5

NOTE:

1. RESTRAINED JOINTS MAY BE USED IN LIEU OF CONCRETE BLOCKING WITH THE APPROVAL OF THE ENGINEER.
2. FIRE HYDRANTS MUST BE INSTALLED WITH A THRUST BLOCK. RESTRAINED JOINTS ARE NOT ALLOWED.

CHANGES IN MAIN ELEVATION, 6" - 12"

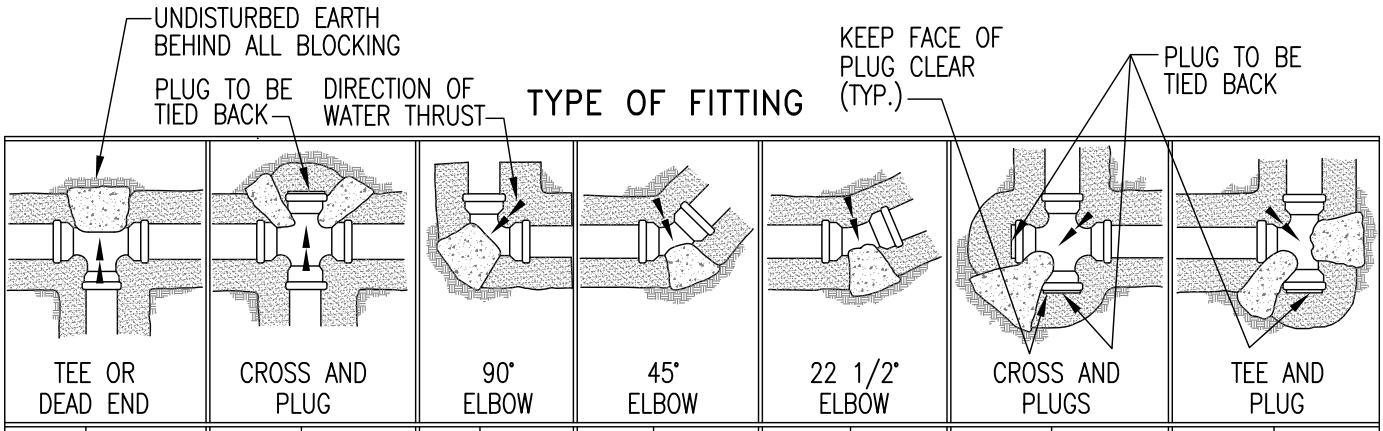

TEE OR DEAD END		CROSS AND PLUG		90° ELBOW		45° ELBOW		22 1/2° ELBOW		CROSS AND PLUGS		TEE AND PLUG	
MAIN SIZE	BEARING AREA	MAIN SIZE	BEARING AREA	MAIN SIZE	BEARING AREA	MAIN SIZE	BEARING AREA	MAIN SIZE	BEARING AREA	MAIN SIZE	BEARING AREA	MAIN SIZE	BEARING AREA
6"	2	6"	3	6"	3	6"	2	6"	1	6"	3	6"	3
8"	3.5	8"	5	8"	5	8"	3	8"	1.5	8"	5	8"	5
12"	8	12"	11.5	12"	11.5	12"	5	12"	3.5	12"	11.5	12"	11.5

NOTES:

1. ABOVE BEARING AREAS BASED ON 150 PSI SERVICE PRESSURE AND 2000 PSF SOIL BEARING CAPACITY. WHERE SOIL CONDITIONS REQUIRE ADJUSTMENT OF ALLOWABLE BEARING PRESSURE, IN THE OPINION OF THE ENGINEER, REQUIRED BLOCKING AREAS WILL BE ADJUSTED.
2. USE CLASS "D" CONCRETE FOR BLOCKING. SEE STANDARD SPECS.
3. VERTICAL CHANGES IN DIRECTION REQUIRE BLOCKING AS SHOWN ABOVE.
4. CONCRETE THRUST BLOCKING SHALL NOT COMPLETELY INUNDATE FITTING.
5. RESTRAINED JOINTS MAY BE USED IN LIEU OF CONCRETE BLOCKING WITH THE APPROVAL OF THE ENGINEER.
6. MAINTAIN 4" MINIMUM CLEARANCE BETWEEN NEW MAIN AND EXISTING UTILITY EXCEPT FOR GAS MAINTAIN 1'-0" CLEARANCE SEE W-106.

REV.	DATE	DESCRIPTION
△		
△		
△		

R:\Utilstds_New_Std_Details\Water_Utilities\W-103

CITY OF SACRAMENTO
DEPARTMENT OF UTILITIES

CHANGES IN MAIN ELEVATION & THRUST BLOCKING FOR WATER MAINS

APPR'D BY: _____ NO SCALE

DATE: SEPT 6, 2017 DWG. NO. **W-103**

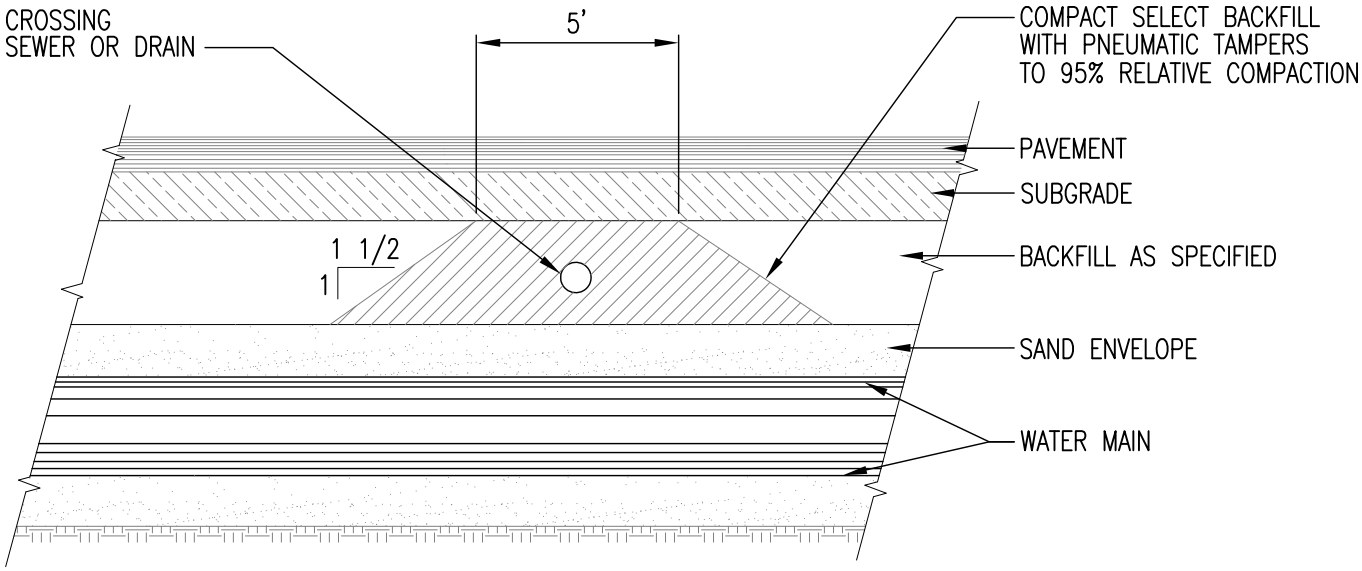

SECTION ALONG PIPE

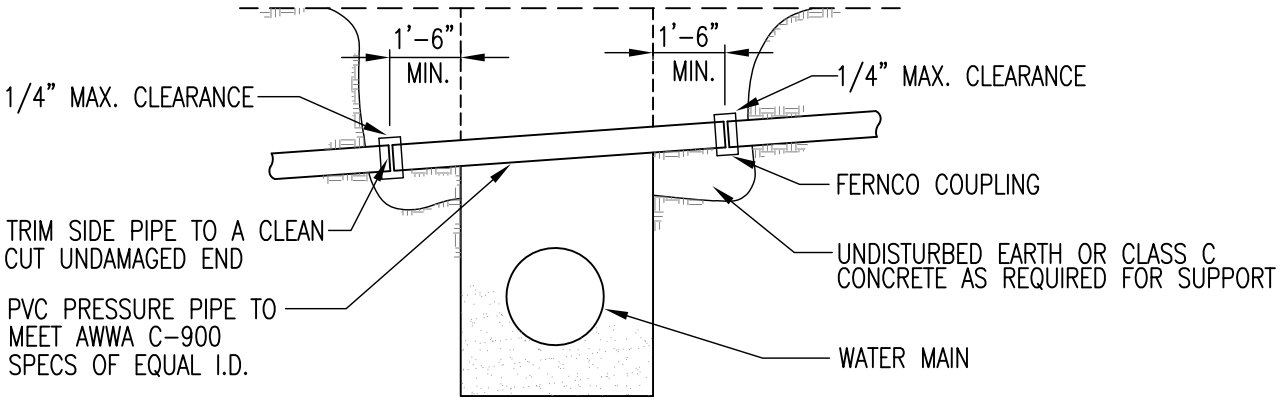

SECTION ACROSS PIPE

NOTES:

1. CONTACT CUSTOMER SERVICE @ 808-5454 FOR ALL LATERAL OR MAIN LINE BREAKS.
2. ALTERATION OF SEWER GRADES WILL BE PERMITTED ONLY AFTER PERMISSION HAS BEEN RECEIVED FROM THE ENGINEER.

REV.	DATE	DESCRIPTION
△		
△		
△		

CITY OF SACRAMENTO **DEPARTMENT OF UTILITIES**	BACKFILL & REPAIR AT SEWER & DRAIN UTILITY CROSSING	APPR'D BY: Mike O. Brosh NO SCALE DATE: MAY 2007 DWG. NO. **W-104**

R:\Utilstds_New_Std_Details\Water_Utilities\W-104

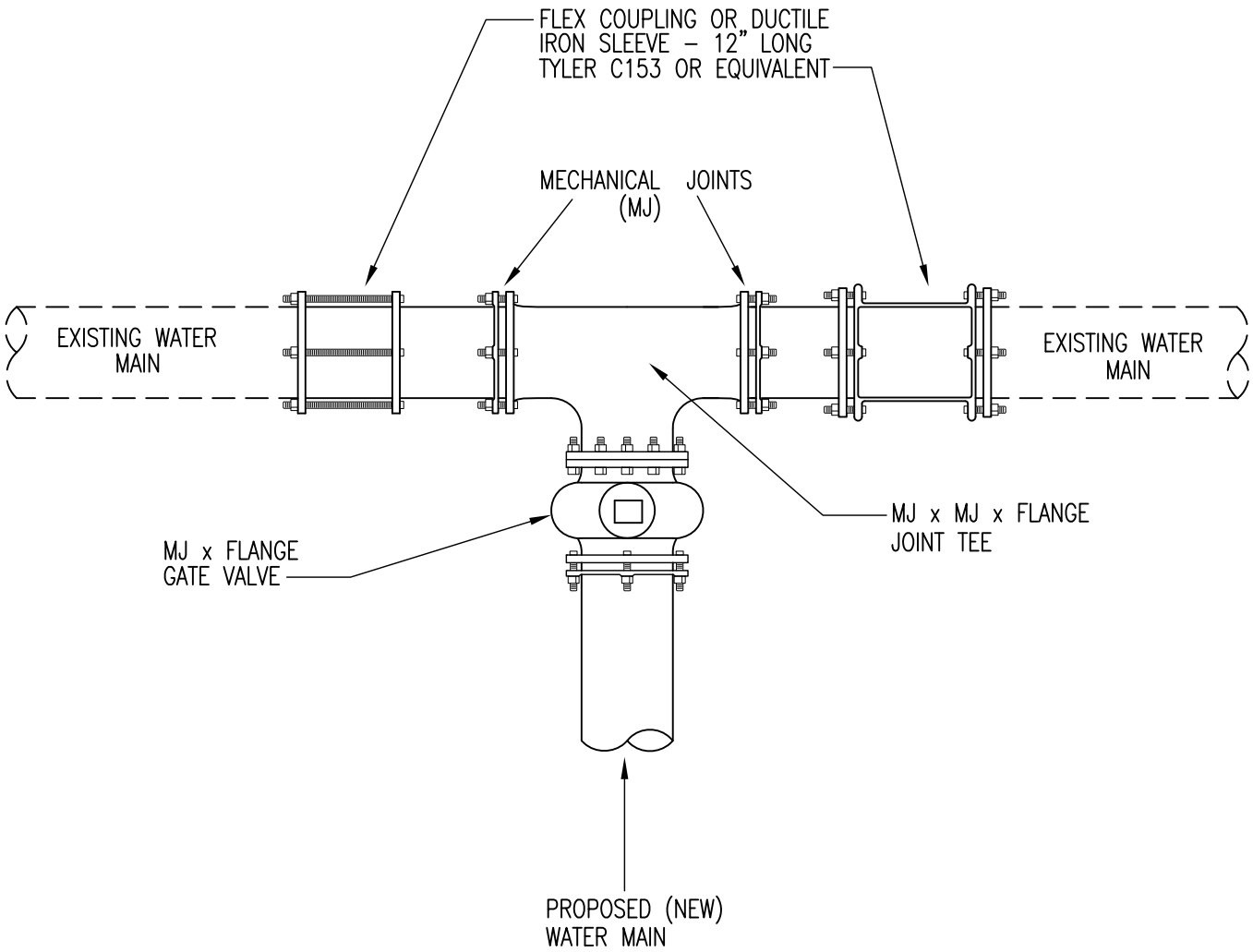

NOTE:
ALL INSTALLATIONS REQUIRE A SHUT DOWN AND DEWATERING OF THE EXISTING WATER MAIN.

REV.	DATE	DESCRIPTION
△		
△		
△		

CITY OF SACRAMENTO **DEPARTMENT OF UTILITIES**	WATER MAIN "CUT-IN" INSTALLATIONS	APPR'D BY: Mike O. Booth NO SCALE DATE: MAY 2007 DWG. NO. **W-105**

R:\Utilstds_New_Std_Details\Water_Utilities\W-105

MINIMUM DEPTH OF COVER FROM PAVEMENT SURFACE SHALL BE 36" UNLESS APPROVED BY THE ENGINEER. IF COVER IS LESS THAN 36", THEN MAIN MATERIAL SHALL BE DUCTILE IRON AND THE MINIMUM DEPTH OF COVER SHALL BE PER THE PIPE MANUFACTURER'S RECOMMENDATIONS.

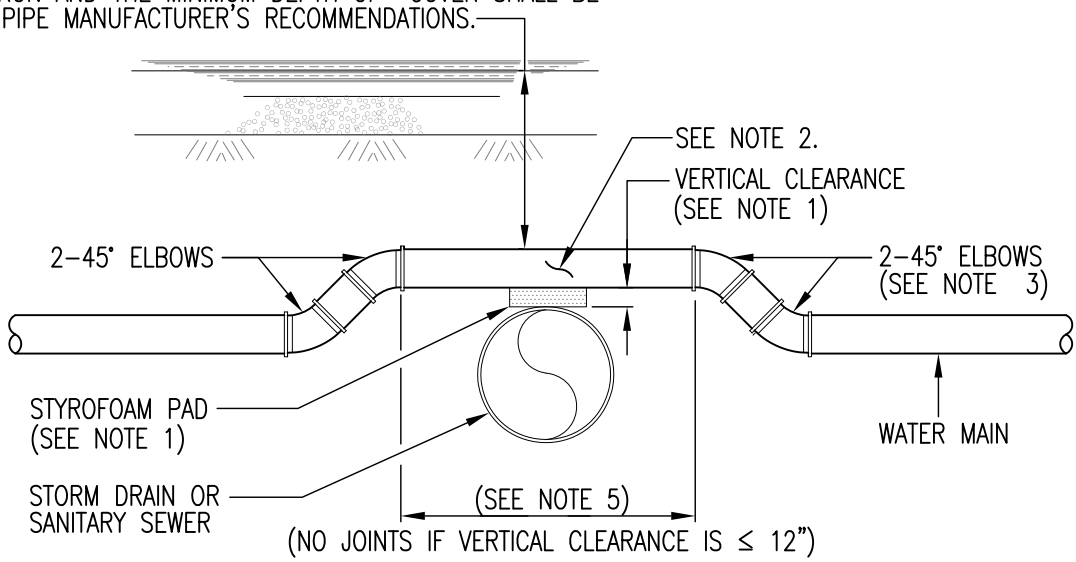

RAISE WATER MAIN

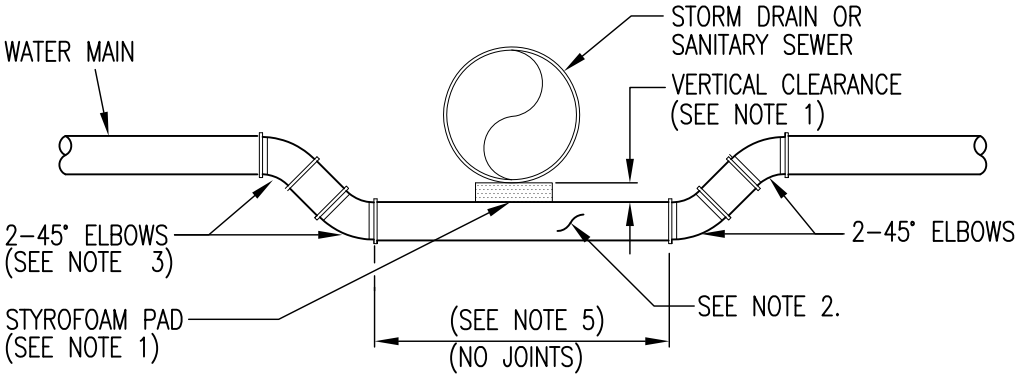

LOWER WATER MAIN

NOTES

1. STYROFOAM PAD SHALL BE 18" SQUARE X 4" THICK
   REQUIRED MINIMUM VERTICAL CLEARANCES:
   - RAISE WATER MAIN:
     - VERTICAL CLEARANCE MUST BE A MINIMUM OF 4". IF ≤ 12", THEN CONTRACTOR SHALL CONSTRUCT WATER MAIN OF ONE OF THE SPECIAL PIPES LISTED IN NOTE 2.
   - LOWER WATER MAIN:
     - VERTICAL CLEARANCE MUST BE A MINIMUM OF 4". THE CONTRACTOR SHALL CONSTRUCT WATER MAIN OF ONE OF THE SPECIAL PIPES LISTED IN NOTE 2.
2. SPECIAL PIPE:
   - DUCTILE IRON PIPE
   - WELDED STEEL WATER PIPE CEMENT-MORTAR LINED AND COATED.
3. THRUST BLOCKS OR HARNESSES FOR RESTRAINING JOINTS NOT SHOWN.
4. NO WATER SERVICES ALLOWED ALONG THE RAISED OR LOWERED LENGTH OF WATER MAIN.
5. ONE FULL LENGTH OF SPECIAL PIPE (DESCRIBED IN NOTE 2) SHALL BE INSTALLED, CENTERED OVER THE NON-POTABLE PIPE TO BE CROSSED. UNLESS DIAMETER OF NON-POTABLE PIPE IS GREATER THAN 36", THEN CONTRACTOR SHALL USE WELDED STEEL PIPE, LENGTH=20'+O.D. OF CONFLICTING UTILITY.

REV.	DATE	DESCRIPTION
△		
△		
△		

CITY OF SACRAMENTO **DEPARTMENT OF UTILITIES**	RAISING AND LOWERING WATER MAINS	APPR'D BY: _____ NO SCALE DATE: SEPT 6, 2017 DWG. NO. **W-106**

R:\Utilstds_New_Std_Details\Water_Utilities\W-106

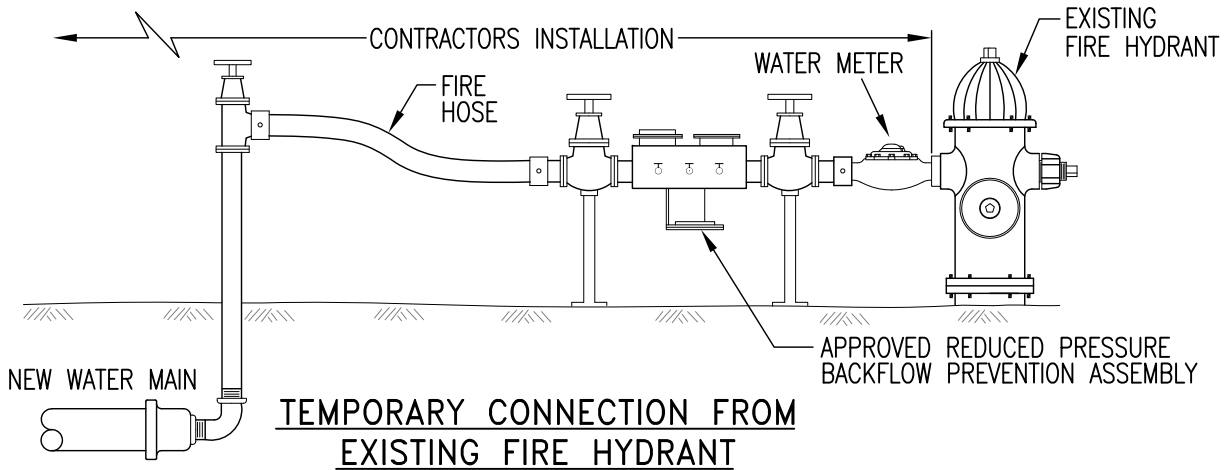

TEMPORARY CONNECTION FROM EXISTING FIRE HYDRANT

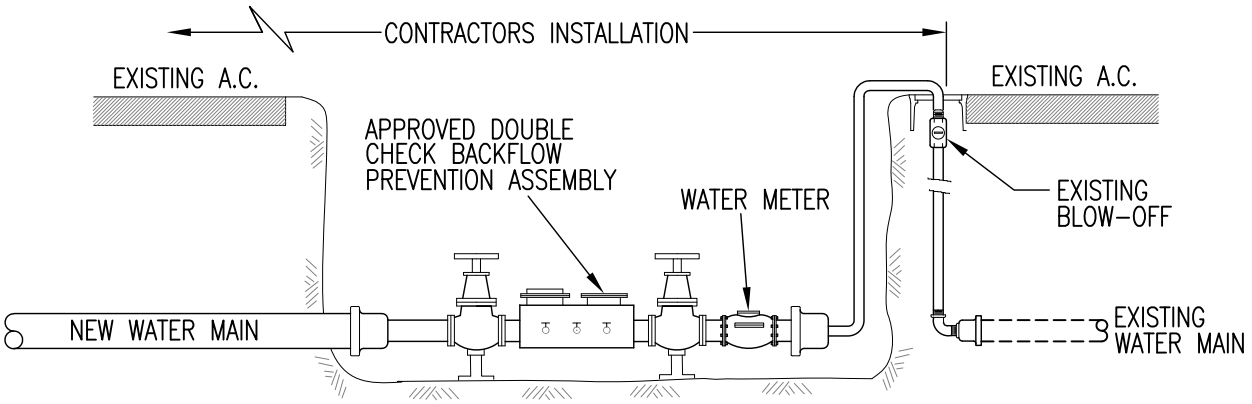

TEMPORARY CONNECTION FROM EXISTING BLOW-OFF

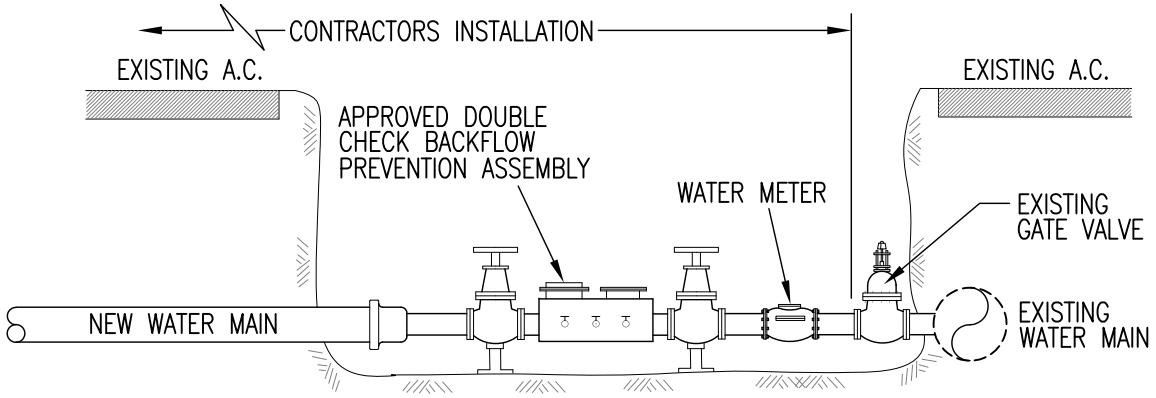

TEMPORARY CONNECTION FROM EXISTING WATER MAIN

NOTES:

1. APPROVED BACKFLOW PREVENTION ASSEMBLIES SHALL BE TESTED IMMEDIATELY AFTER THEY ARE INSTALLED, RELOCATED OR REPAIRED AND NOT PLACED IN SERVICE UNLESS THEY ARE FUNCTIONING AS REQUIRED.
2. TESTING OF BACKFLOW PREVENTION ASSEMBLIES SHALL BE PERFORMED BY CERTIFIED BACKFLOW PREVENTION ASSEMBLY TESTERS.
3. CURRENT LISTS OF APPROVED BACKFLOW ASSEMBLIES AND CERTIFIED TESTERS ARE AVAILABLE AT THE DEPARTMENT OF UTILITIES CUSTOMER SERVICE OFFICE, 1395 35TH AVENUE.
4. THE APPROVED BACKFLOW ASSEMBLY SHALL PASS THE REQUIRED TEST PRIOR TO FILLING THE NEW WATER MAIN.
5. FOR METER/STRAINER LAY LENGTH CONTACT METER SHOP SUPERVISOR CITY OPERATOR @ 311

REV.	DATE	DESCRIPTION
△		
△		
△		

CITY OF SACRAMENTO **DEPARTMENT OF UTILITIES**	TYP. CONNECTIONS FOR INITIAL FILLING OF NEW WATER MAIN	APPR'D BY: _____ NO SCALE DATE: SEPT 6, 2017 DWG. NO. **W-107**

R:\Utilstds_New_Std_Details\Water_Utilities\W-107

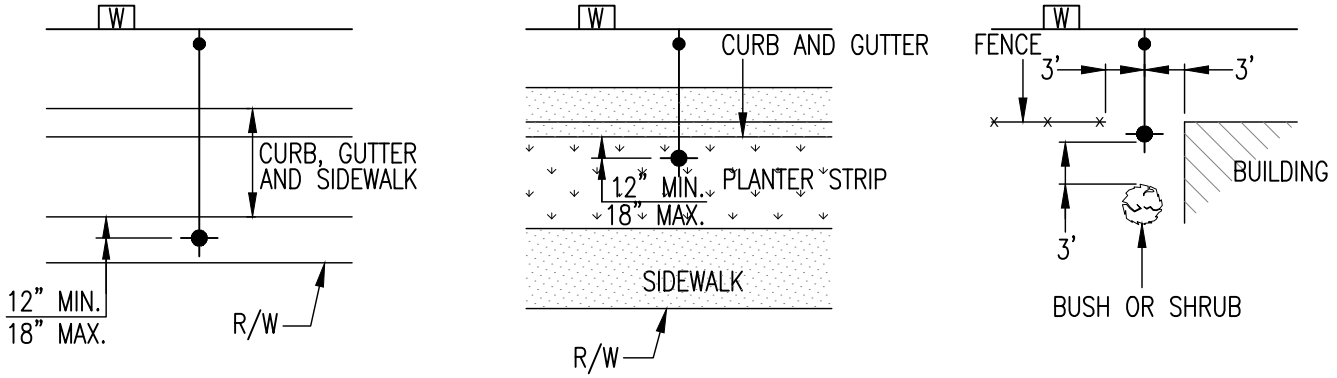

PLACEMENT OF FIRE HYDRANTS

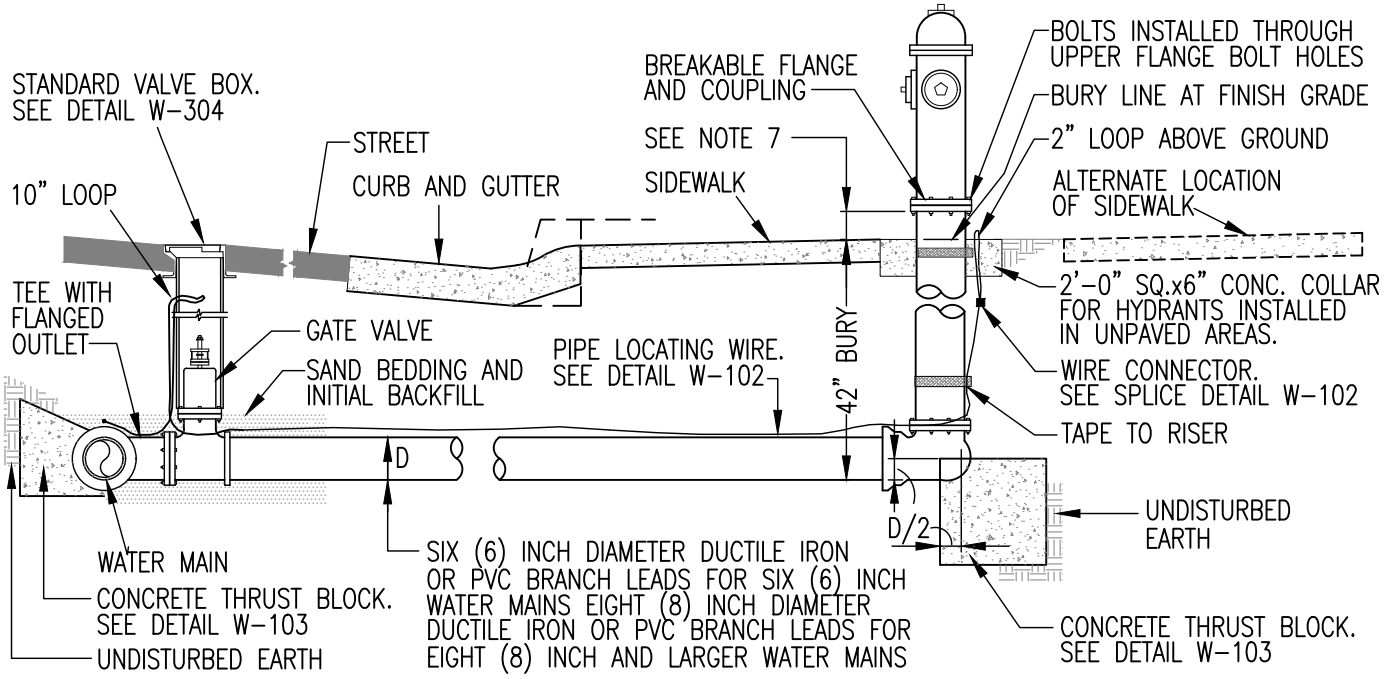

ELEVATION

NOTES

1. BODY OF ALL FIRE HYDRANTS SHALL BE PAINTED WITH TWO COATS OF RUST-OLEUM PROFESSIONAL OIL BASED ENAMEL ALUMINUM #7715 COLOR OR EQUAL.
2. TOP (BONNET OR DOME) OF ALL HYDRANTS SHALL BE PAINTED TO THE FOLLOWING COLOR CODE ACCORDING TO THE SIZE OF THE WATER MAIN THE HYDRANTS ARE CONNECTED TO:
   - RED: FOR 6" MAINS
   - ORANGE: FOR 8"-10" MAINS
   - GREEN: FOR 12" AND LARGER MAINS
3. THE BLUE REFLECTORS SHALL BE IN ACCORDANCE WITH SECTION 32-4 OF THESE STANDARD SPECIFICATIONS AND PLACED ON THE HYDRANT SIDE OF THE STREET 5" FROM THE STREET CENTERLINE IN DIRECTION OF THE HYDRANT WITH REFLECTOR SIDES FACING TRAFFIC. PROVIDE TWO MARKERS FOR HYDRANTS INSTALLED AT MAJOR STREET INTERSECTIONS.
4. ONLY ONE (1) 6" OR 12" EXTENSION MAY BE USED FOR FIRE HYDRANT ADJUSTMENT TO GRADE. ALL OTHER ADDITIONAL ADJUSTMENTS MAY BE MADE WITH THE USE OF 45° ELBOWS ON THE HYDRANT LEAD.
5. OPERATING NUT AND OUTLET NOZZLE CAP NUTS SHALL BE 1-1/2" PENTAGON IN SHAPE.
6. FIRE HYDRANTS ARE TO BE INSTALLED SO THE BURY LINE IS AT FINISHED GRADE. IF THIS IS NOT POSSIBLE DUE TO EXISTING UTILITIES THEN THE FOLLOWING VARIANCE MAY BE ALLOWED. 2" MINIMUM AND 5" MAXIMUM, MEASURED FROM THE BOTTOM OF THE HYDRANT FLANGE TO FINISHED GRADE.
7. BARREL DRAIN OUTLET-NONE REQUIRED. IF HYDRANT IS PROVIDED WITH SUCH AN OUTLET IT MUST BE PLUGGED WITH A THREADED BRONZE OR CAST IRON PLUG.

REV.	DATE	DESCRIPTION
△		
△		
△		

R:\Utilstds_New_Std_Details\Water_Utilities\W-201

CITY OF SACRAMENTO DEPARTMENT OF UTILITIES	FIRE HYDRANT INSTALLATIONS	APPR'D BY: _____ NO SCALE DATE: SEPT 6, 2017 DWG. NO. W-201

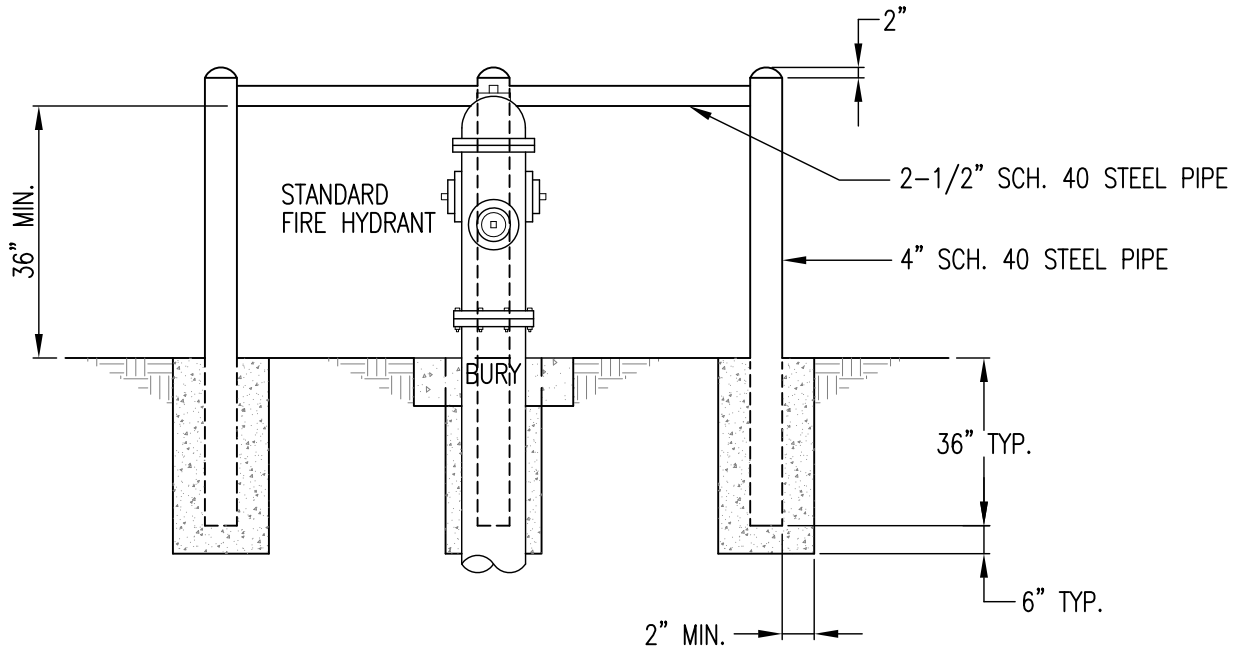

ELEVATION

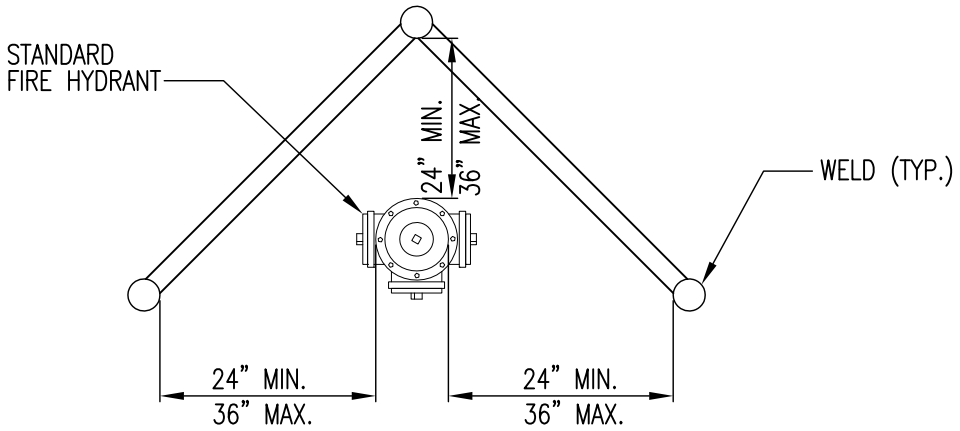

PLAN

NOTES:

1. TO BE INSTALLED ONLY IN WARRANTED AREAS, i.e. PARKING LOTS, HEAVY TRAFFIC AREAS, ETC.
2. 4 INCH PIPES TO BE POURED FULL OF CONCRETE. TOP OF PIPE FINISHED OFF.
3. NO TOP BRACE AT PUMPER OUTLET.
4. EXPOSED STEEL PIPE TO BE PAINTED WITH 2 COATS OF RUST-OLEUM PROFFESIONAL OIL BASED ENAMEL ALUMINUM (#7715) OR EQUAL. PRIMER AND METAL PREPARATION AS SPECIFIED BY MANUFACTURER.

REV.	DATE	DESCRIPTION
△		
△		
△		

CITY OF SACRAMENTO DEPARTMENT OF UTILITIES	FIRE HYDRANT PROTECTION	APPR'D BY: Mike O. Booth NO SCALE DATE: MAY 2007 DWG. NO. W-202

R:\Utilstds_New_Std_Details\Water_Utilities\W-202

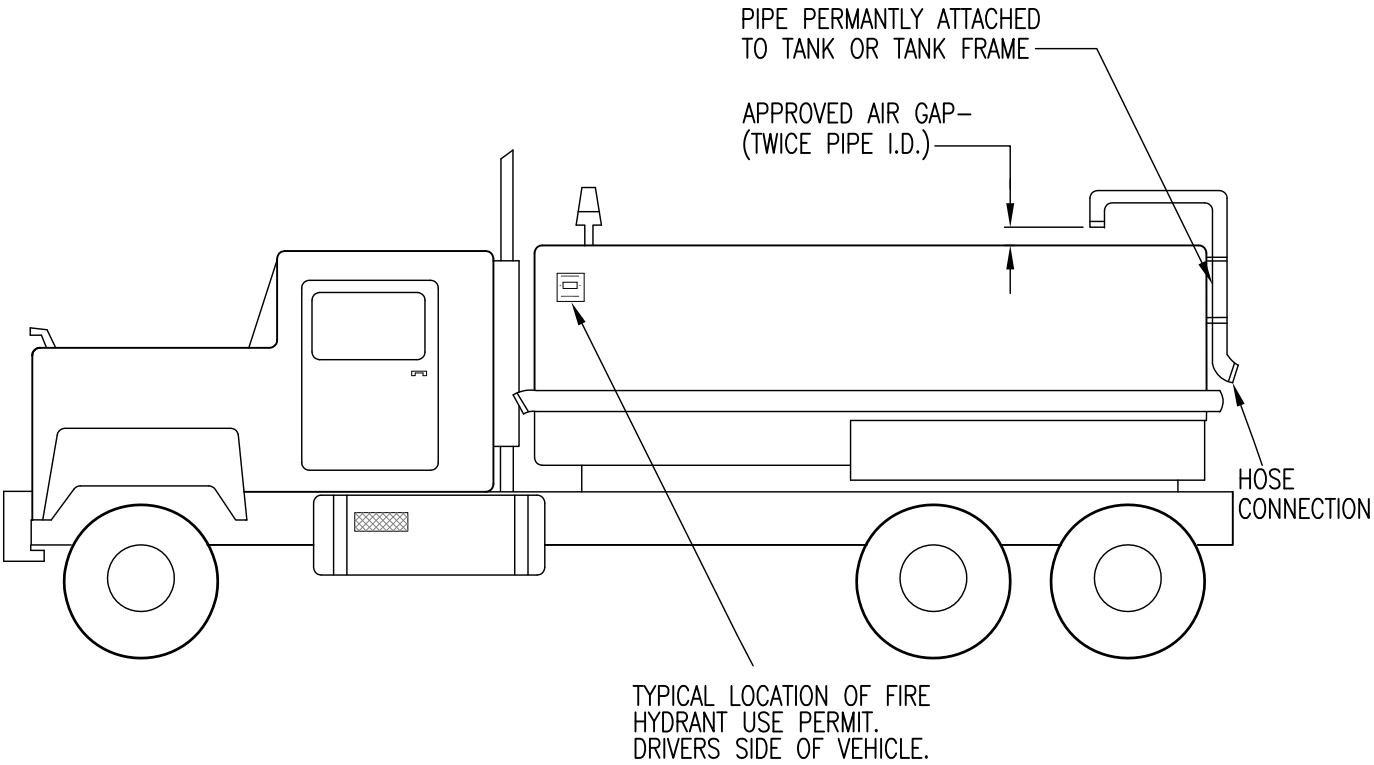

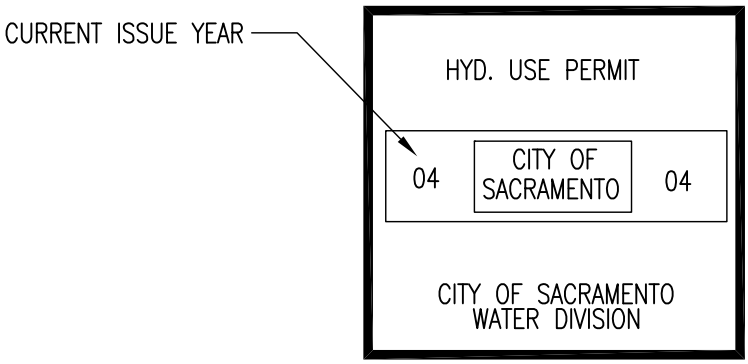

NOTES:

1. "AIR GAP SEPARATION" MEANS A PHYSICAL SEPARATION BETWEEN THE DISCHARGE END OF A POTABLE WATER SUPPLY PIPELINE AND AN OPEN OR NON–PRESSURE RECEIVING TANK.
2. AN "APPROVED AIR GAP SEPARATION" SHALL BE AT LEAST TWICE THE DIAMETER OF THE SUPPLY PIPE MEASURED VERTICALLY ABOVE THE OVERFLOW RIM OF THE RECEIVING TANK. IN NO CASE SHALL THE AIR GAP BE LESS THAN ONE INCH.
3. METER IS REQUIRED FOR FILLING WATER TRUCKS AND PORTABLE EQUIPMENT, CUSTOMER SHALL PROVIDE A SECURITY DEPOSIT AND BE RESPONSIBLE FOR THE SECURITY AND CONDITION OF THE METER FOR DURATION OF THE PERMIT.
4. CUSTOMER SHALL RETURN METER TO RECEIVE REFUND OF SECURITY DEPOSIT LESS ANY UNPAID WATER USAGE FEES, DAMAGED/STOLEN METER WILL RESULT IN FORFEITURE OF ALL OR PART OF THE SECURITY DEPOSIT.

REV.	DATE	DESCRIPTION

CITY OF SACRAMENTO **DEPARTMENT OF UTILITIES**	REQUIREMENTS FOR FIRE HYDRANT USE PERMITS WATER TRUCKS	APPR'D BY: Mike O. Brosh NO SCALE DATE: APRIL 2012 DWG. NO. **W-203**

R:\Utilstds_New_Std_Details\Water_Utilities\W-203

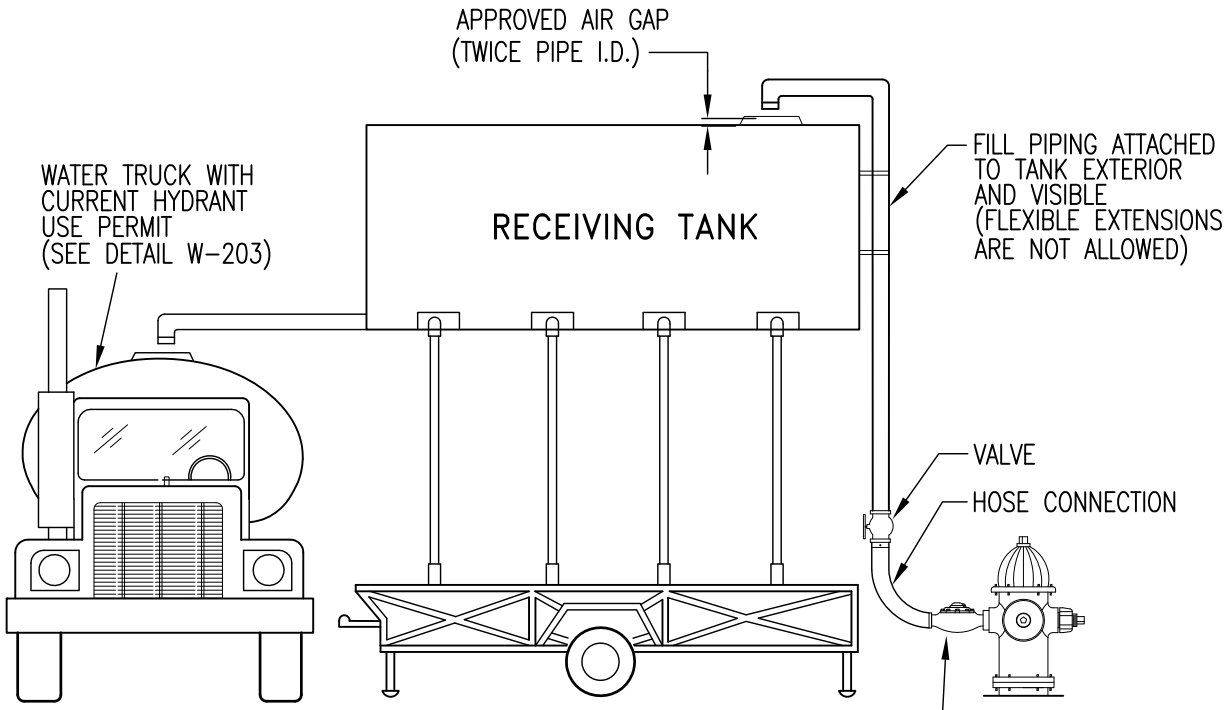

PORTABLE WATER TANK

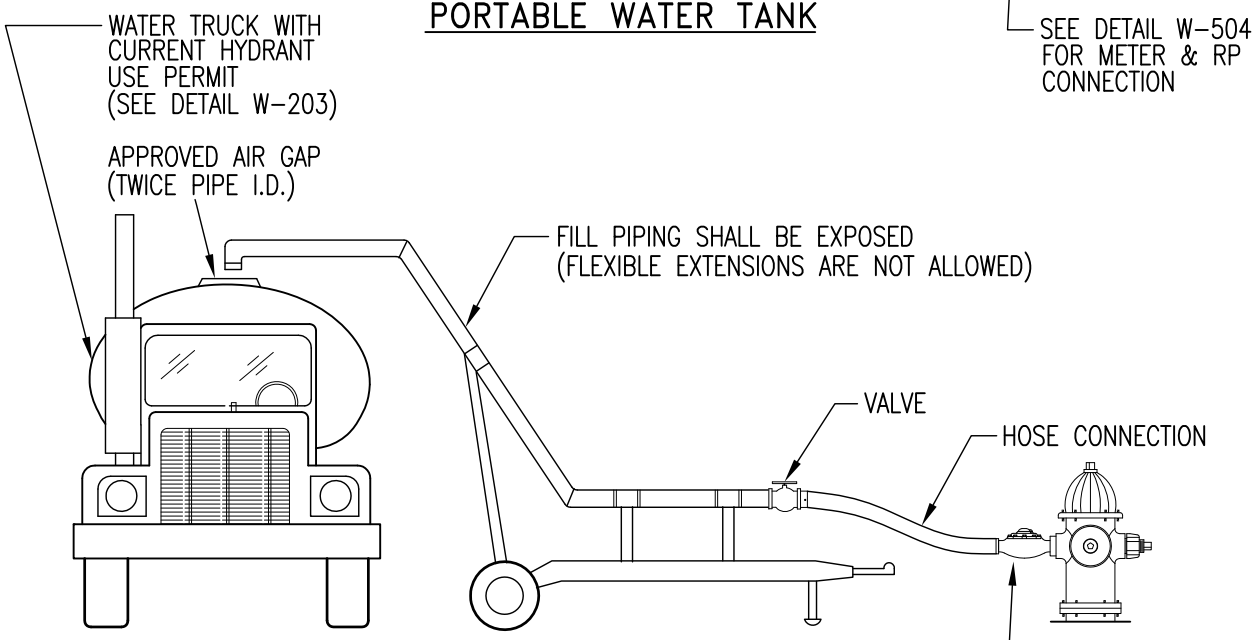

PORTABLE WATER LOADING DEVICE

NOTES:

1. PORTABLE WATER TRUCK FILL STATIONS SHALL BE INSPECTED ANNUALLY BY THE DEPARTMENT OF UTILITIES PRIOR TO THEIR USE. METER IS REQUIRED FOR PORTABLE TANKS AND LOADING DEVICES, SEE W-504 FOR CONNECTION DETAIL.
2. ALTERNATIVE WATER TRUCK FILL STATIONS SHALL BE SUBMITTED TO THE DEPARTMENT OF UTILITIES PRIOR TO USE.
3. ONLY WATER TRUCKS WITH CURRENT PERMIT STICKER SHALL BE ALLOWED TO FILL AT PORTABLE WATER TRUCK STATIONS.
4. LOCATION OF PORTABLE WATER TRUCK FILL STATIONS BE SITE SPECIFIC.
5. NO HOSES SHALL BE LAID ACROSS STREETS OR TRAFFIC AREAS.

REV.	DATE	DESCRIPTION
△		
△		
△		

CITY OF SACRAMENTO **DEPARTMENT OF UTILITIES**	PORTABLE WATER TRUCK FILL STATIONS	APPR'D BY: Mike O. Booth NO SCALE DATE: APRIL 2012 DWG. NO. **W-204**

R:\Utilstds_New_Std_Details\Water_Utilities\W-204

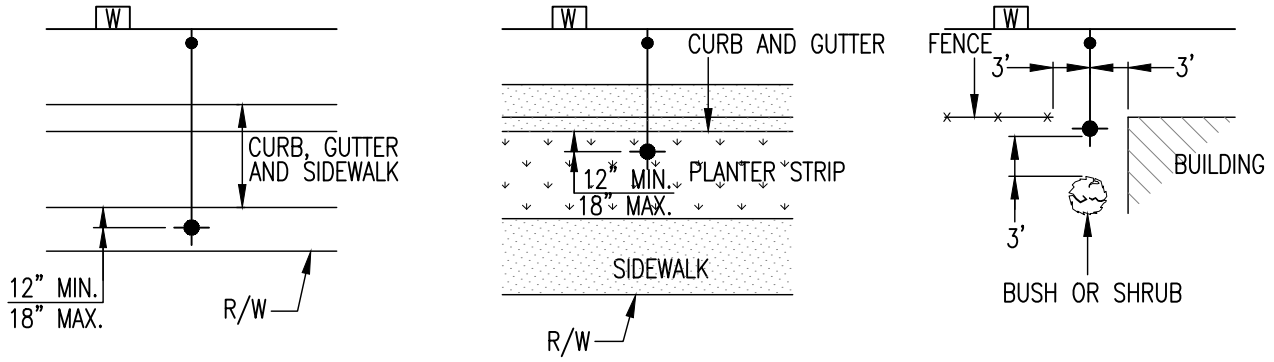

PLACEMENT OF VERTICAL SHOE FIRE HYDRANTS

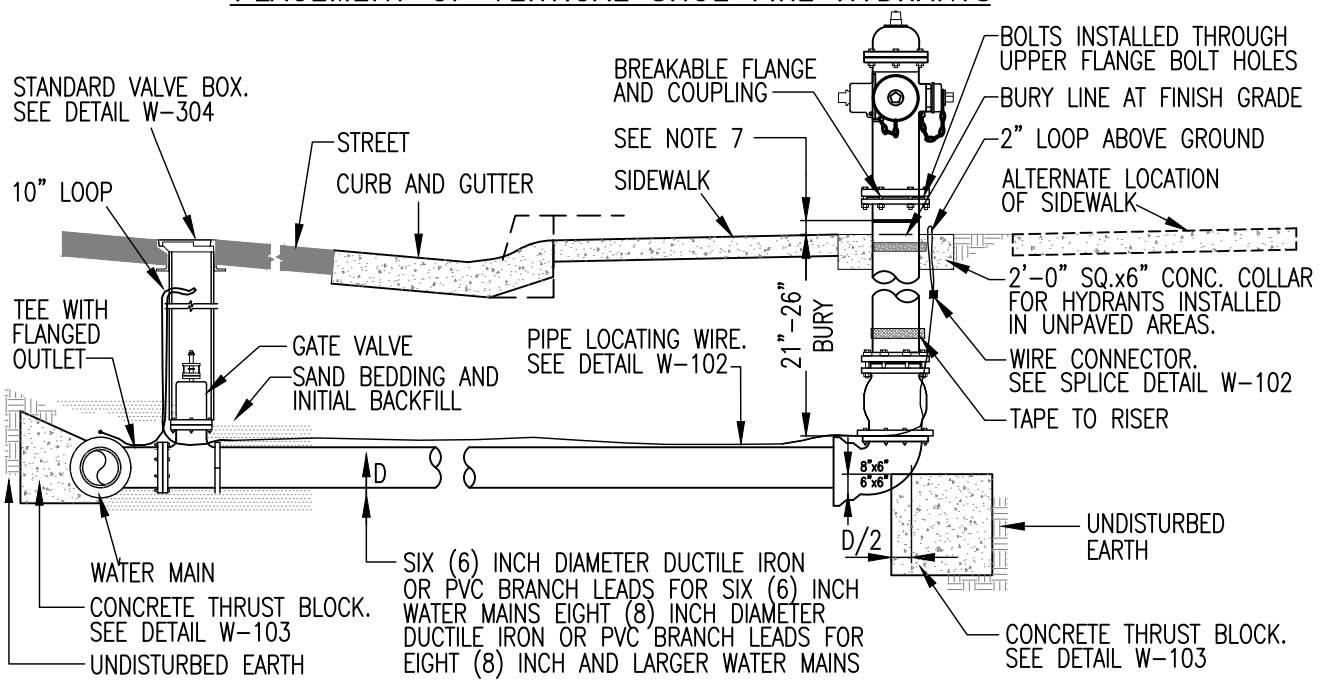

NOTES

1. BODY OF ALL FIRE HYDRANTS SHALL BE PAINTED WITH TWO COATS OF RUST-OLEUM PROFESSIONAL OIL BASED ENAMEL ALUMINUM #7715 COLOR OR EQUAL.
2. TOP (BONNET OR DOME) OF ALL HYDRANTS SHALL BE PAINTED TO THE FOLLOWING COLOR CODE ACCORDING TO THE SIZE OF THE WATER MAIN THE HYDRANTS ARE CONNECTED TO:
   - RED: FOR 6" MAINS
   - ORANGE: FOR 8"-10" MAINS
   - GREEN: FOR 12" AND LARGER MAINS
3. THE BLUE REFLECTORS SHALL BE IN ACCORDANCE WITH SECTION 32-4 OF THESE STANDARD SPECIFICATIONS AND PLACED ON THE HYDRANT SIDE OF THE STREET 5" FROM THE STREET CENTERLINE IN DIRECTION OF THE HYDRANT WITH REFLECTOR SIDES FACING TRAFFIC. PROVIDE TWO MARKERS FOR HYDRANTS INSTALLED AT MAJOR STREET INTERSECTIONS.
4. OPERATING NUT AND OUTLET NOZZLE CAP NUTS SHALL BE 1-1/2" PENTAGON IN SHAPE.
5. FIRE HYDRANTS ARE TO BE INSTALLED SO THE BURY LINE IS AT FINISHED GRADE. IF THIS IS NOT POSSIBLE DUE TO EXISTING UTILITIES THEN THE FOLLOWING VARIANCE MAY BE ALLOWED. 2" MINIMUM AND 5" MAXIMUM, MEASURED FROM THE BOTTOM OF THE HYDRANT FLANGE TO FINISHED GRADE.
6. BARREL DRAIN OUTLET-NONE REQUIRED. IF HYDRANT IS PROVIDED WITH SUCH AN OUTLET IT MUST BE PLUGGED WITH A THREADED BRONZE OR CAST IRON PLUG.
7. FIRE HYDRANTS ARE TO BE INSTALLED SO THE BURY LINE IS AT FINISHED GRADE. IF THIS IS NOT POSSIBLE DUE TO EXISTING UTILITIES THEN THE FOLLOWING VARIANCE MAY BE ALLOWED. 2" MINIMUM AND 5" MAXIMUM, MEASURED FROM THE BOTTOM OF THE HYDRANT FLANGE TO FINISHED GRADE.
8. FIRE HYDRANTS SHALL BE MUELLER SUPER CENTURION OR APPROVED EQUAL.

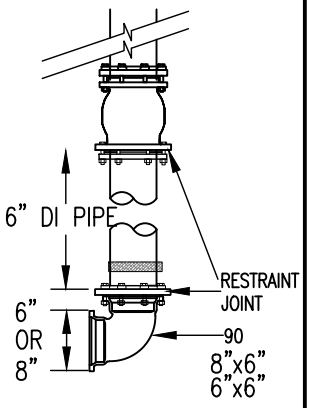

REV.	DATE	DESCRIPTION
△		
△		
△		

CITY OF SACRAMENTO DEPARTMENT OF UTILITIES	VERTICAL SHOE FIRE HYDRANT	APPR'D BY: NO SCALE DATE: OCT 15, 2017 DWG. NO. W-205

R:\Utilstds_New_Std_Details\Water_Utilities\W-205

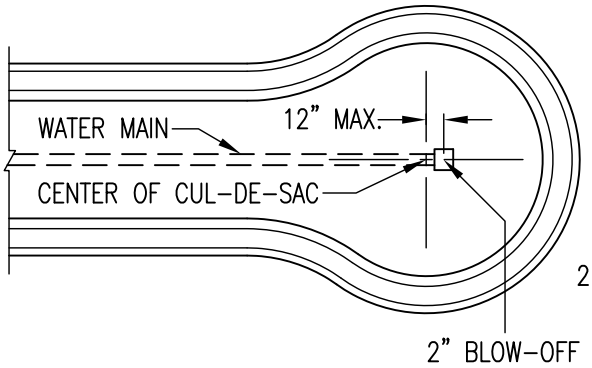

2" BLOW-OFF TYPICAL INSTALLATION IN CUL-DE-SAC

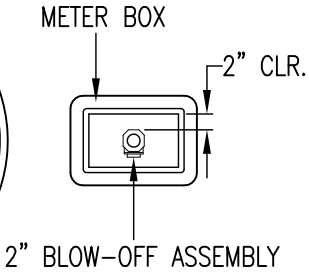

PLAN

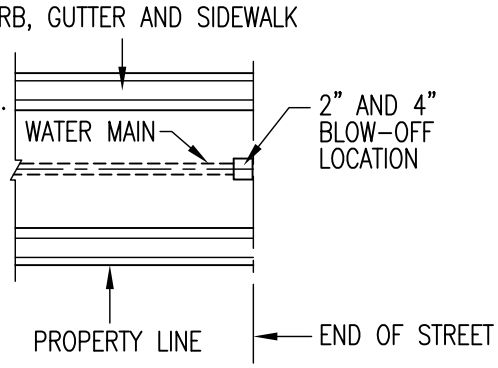

2" AND 4" BLOW-OFF TYPICAL FOR END OF STREET

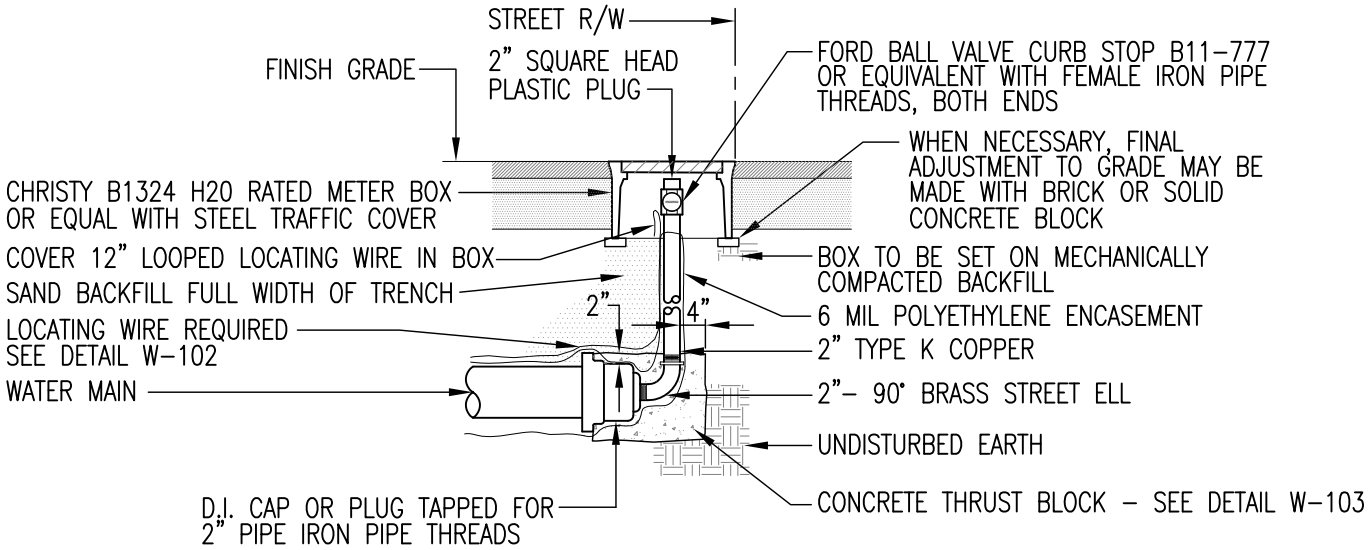

ELEVATION STANDARD 2" BLOW-OFF

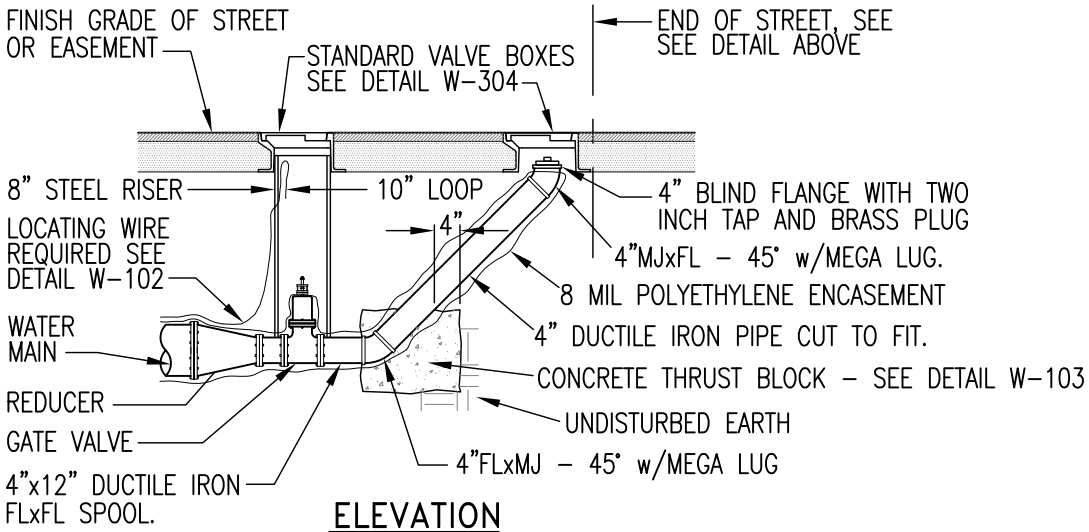

ELEVATION STANDARD 4" BLOW-OFF

REV.	DATE	DESCRIPTION
△		
△		
△		

CITY OF SACRAMENTO
DEPARTMENT OF UTILITIES

STANDARD 2-INCH AND 4-INCH BLOW-OFF

APPR'D BY: Mike O. Booth NO SCALE
DATE: MAY 2007 DWG. NO. **W-301**

R:\Utilstds_New_Std_Details\Water_Utilities\W-301

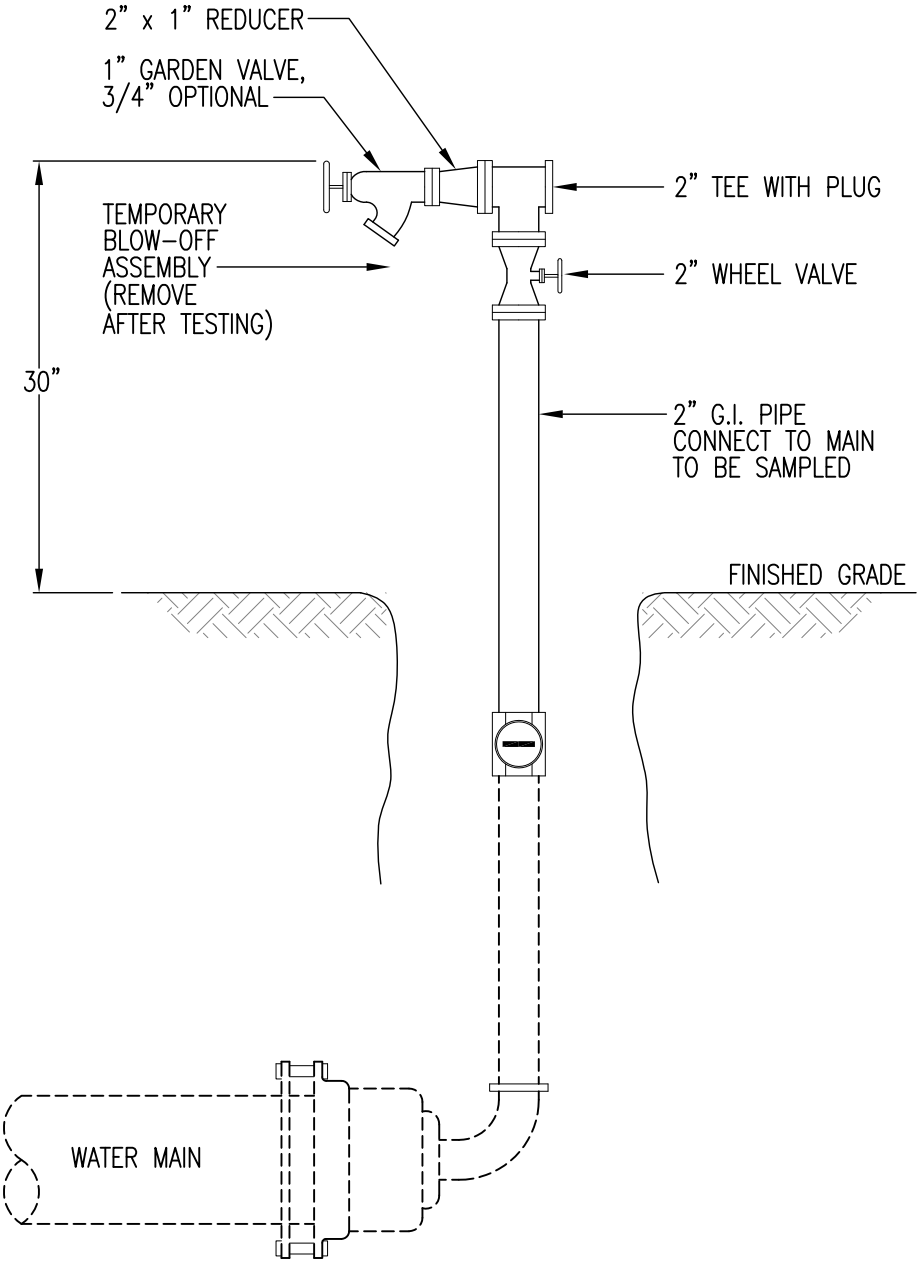

ELEVATION

REV.	DATE	DESCRIPTION

CITY OF SACRAMENTO
DEPARTMENT OF UTILITIES

TEMPORARY 2 - INCH
SAMPLING DEVICE

APPR'D BY: Mike O. Booth NO SCALE
DATE: MAY 2007 DWG. NO. **W-302**

R:\Utilstds_New_Std_Details\Water_Utilities\W-302

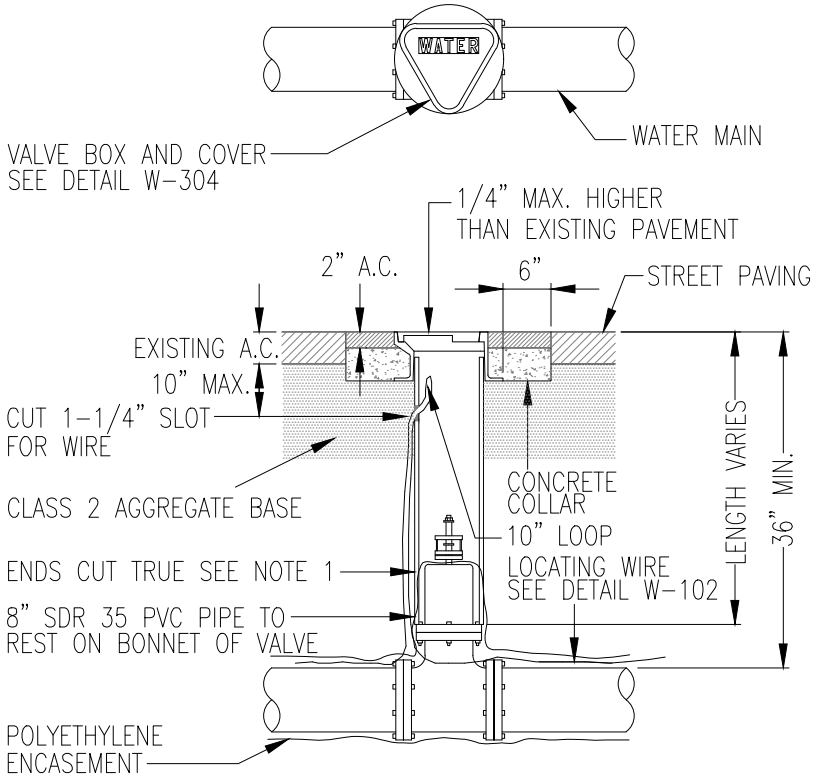

NOTE:

1. ONE (1) CONTINUOUS PIECE
2. NUT EXTENSION REQUIRED WHEN VALVE NUT IS IN EXCESS OF 30" BELOW FINISH GRADE. SEE W-308.

VALVE BOX INSTALLATION IN CITY STREETS ALLEYS AND PAVED UTILITY EASEMENTS

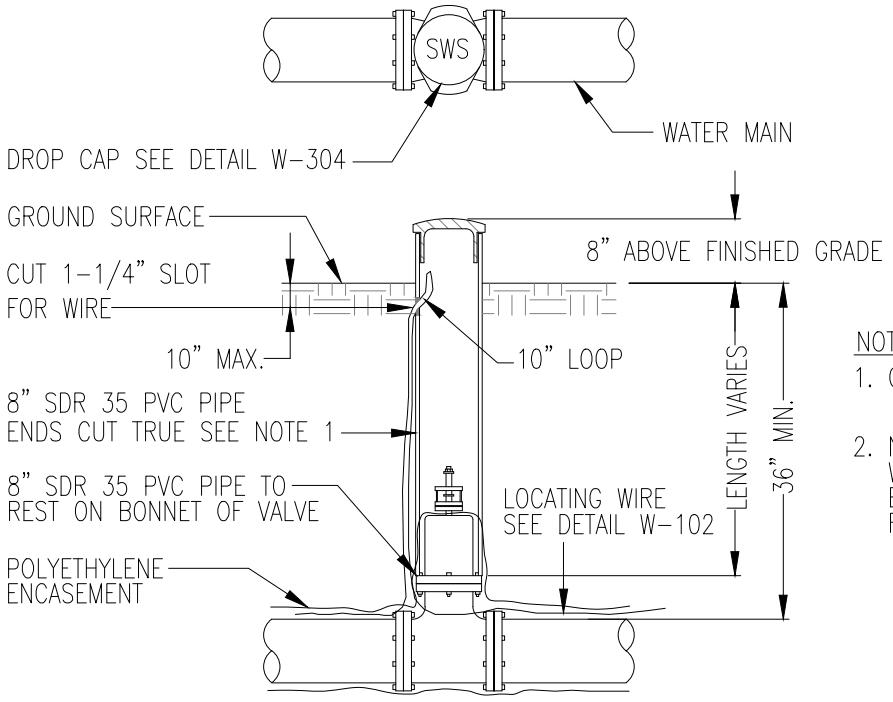

NOTE:

1. ONE (1) CONTINUOUS PIECE
2. NUT EXTENSION REQUIRED WHEN VALVE NUT IS IN EXCESS OF 30" BELOW FINISH GRADE. SEE W-308.

VALVE BOX INSTALLATION IN PUBLIC UTILITY EASEMENTS

REV.	DATE	DESCRIPTION

CITY OF SACRAMENTO DEPARTMENT OF UTILITIES	STANDARD VALVE BOX INSTALLATION FOR CITY STREETS, ALLEY & EASEMENTS	APPR'D BY: _____ NO SCALE DATE: APRIL 2012 DWG. NO. W-303

R:\Utilstds_New_Std_Details\Water_Utilities\W-303

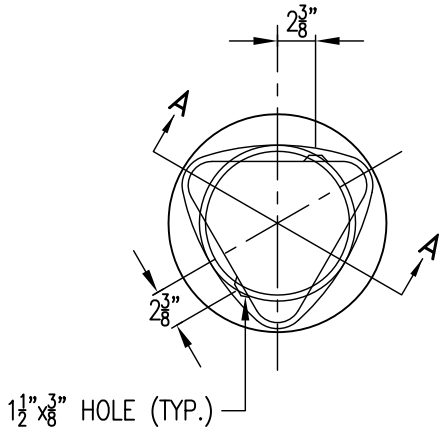

PLAN

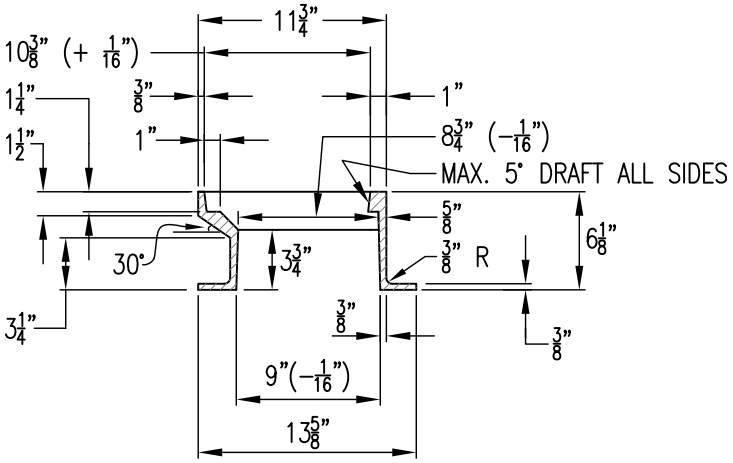

SECTION A-A

VALVE BOX FOR STREETS AND PAVED SURFACES

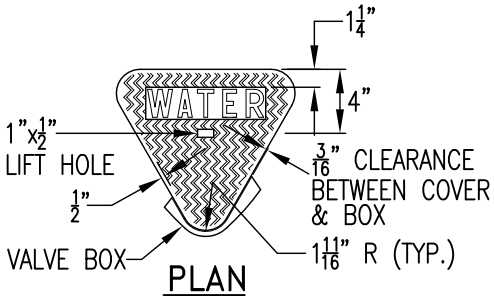

PLAN

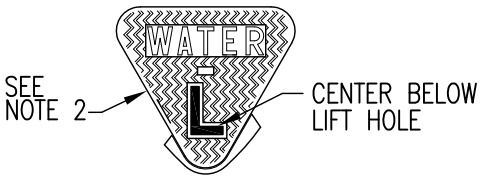

PLAN

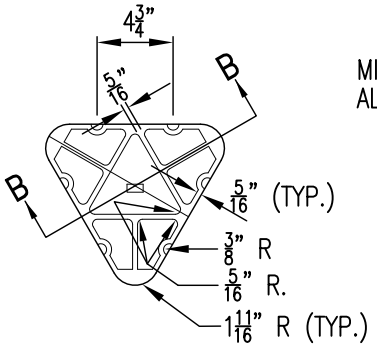

VALVE BOX COVER

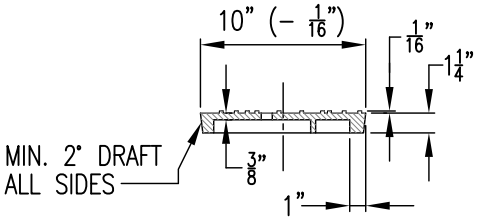

SECTION B-B

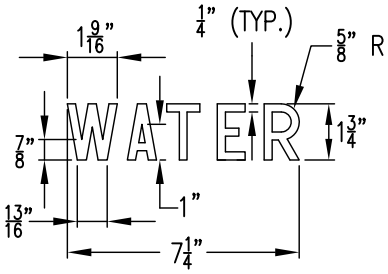

LETTERS ON COVER

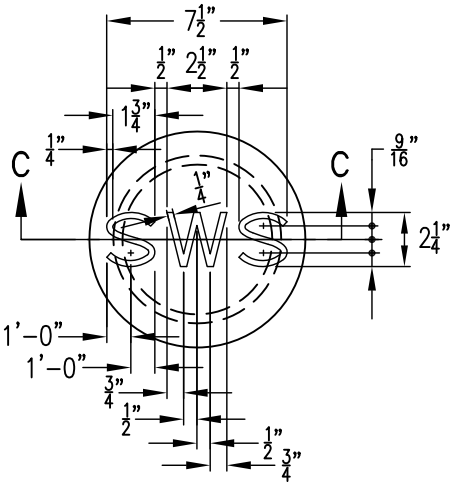

PLAN & LETTERS ON TOP OF DROP CAP

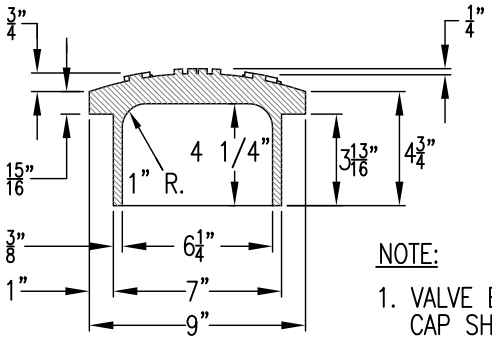

SECTION C-C

NOTE:

1. VALVE BOX, VALVE BOX COVER AND DROP CAP SHALL BE CONSTRUCTED OF CAST IRON WITH MINIMUM TENSILE STRENGTH OF 25,000 P.S.I.
2. VALVE COVER WITH "L" DESIGNATION SHALL BE USED FOR NEW VALVE INSTALLATION SOUTH OF THE AMERICAN RIVER.

DROP CAP FOR PUBLIC UTILITY EASEMENTS

REV.	DATE	DESCRIPTION
△		
△		
△		

R:\Utilstds_New_Std_Details\Water_Utilities\W-304

CITY OF SACRAMENTO **DEPARTMENT OF UTILITIES**	STANDARD VALVE BOX AND DROP CAP	APPR'D BY: Mike O. Booth NO SCALE DATE: APRIL 2012 DWG. NO. **W-304**

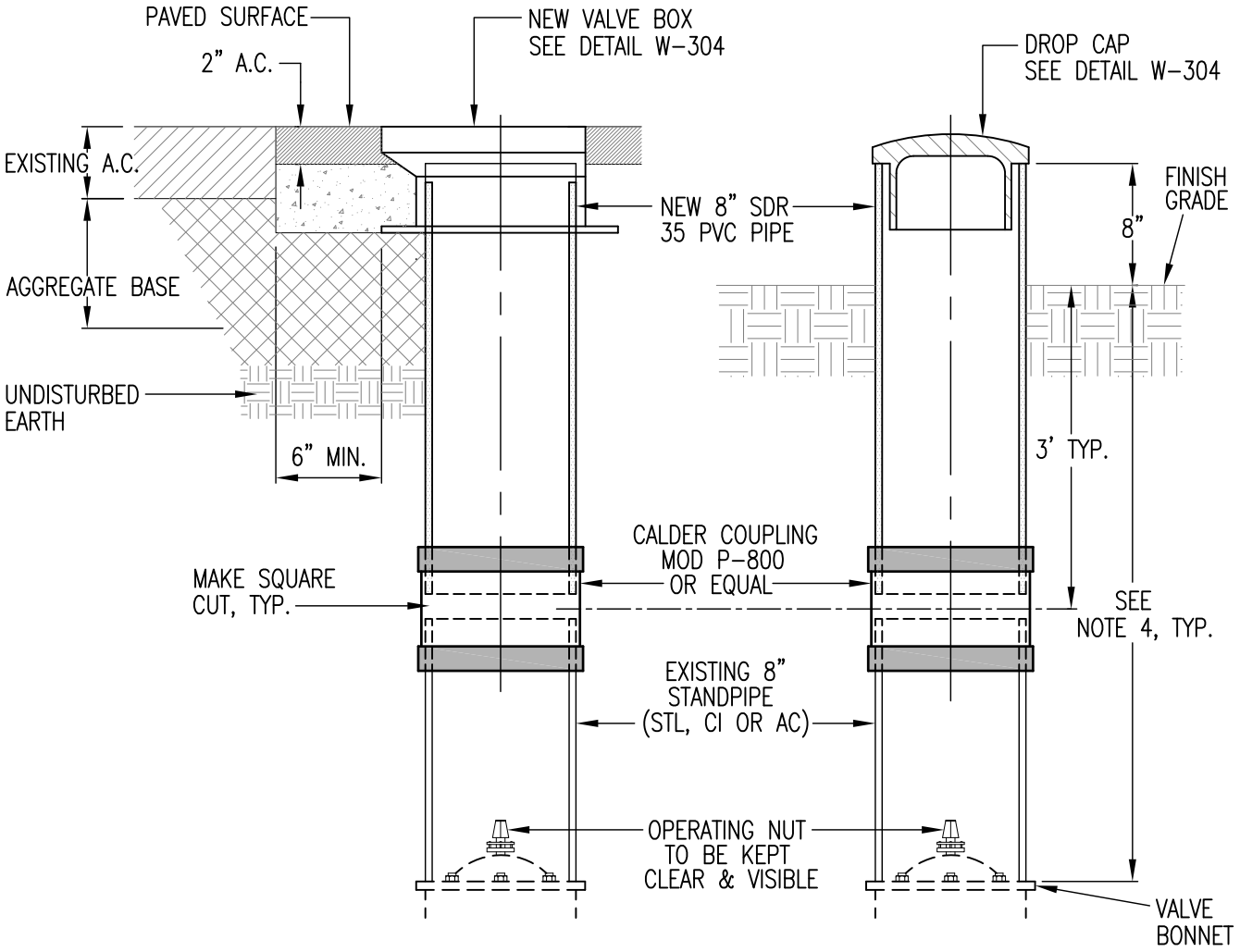

VALVE BOX WITH EXISTING STEEL STANDPIPE

DROP CAP WITH EXISTING STEEL STANDPIPE

NOTES:

1. ALL EXISTING VALVE BOXES THAT MEET THESE STANDARDS WITH BOTTOM FLANGES MAY BE REUSED BY THE CONTRACTOR WITH THE APPROVAL OF THE ENGINEER. EXISTING DROP CAPS INSTALLED IN CITY STREETS AND ALLEYS SHALL BE REPLACED WITH STANDARD VALVE BOXES AND RETURNED TO THE CITY CORPORATION YARD.
2. ALL VALVE BOXES NOT MENTIONED IN NOTE No.1 WILL BECOME THE PROPERTY OF AND DISPOSED OF BY THE CONTRACTOR.
3. TRACER/LOCATOR WIRE SHALL BE ADJUSTED TO 10" PER DETAIL W-102.
4. IF VALVE BONNET DEPTH IS LESS THAN 3' DEEP REPLACE ENTIRE RISER WITH SDR 35 PVC PIPE. IF VALVE BONNET IS MORE THAN 3'-DEEP, EXPOSE JUST THE TOP 3' OF THE RISER CUT SQUARE AS SHOWN @ 3', AND REPLACE TOP 3' w/SDR 35 PVC & CALDER COUPLING AS SHOWN. SEE W-303.

REV.	DATE	DESCRIPTION
△		
△		
△		

CITY OF SACRAMENTO
DEPARTMENT OF UTILITIES

RAISING VALVE BOXES AND DROP CAPS

APPR'D BY: Mike O. Booth NO SCALE

DATE: APRIL 2012 DWG. NO. **W-306**

R:\Utilstds_New_Std_Details\Water_Utilities\W-306

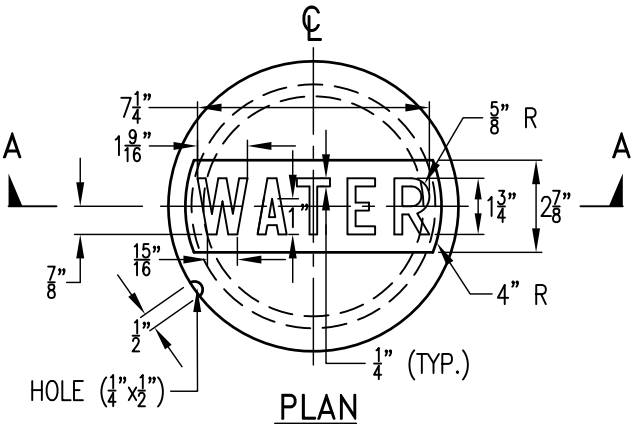

PLAN

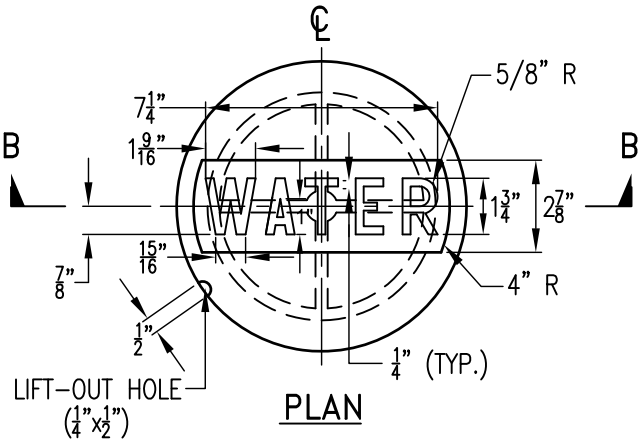

PLAN

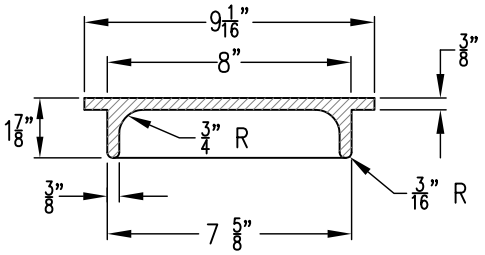

SECTION A–A

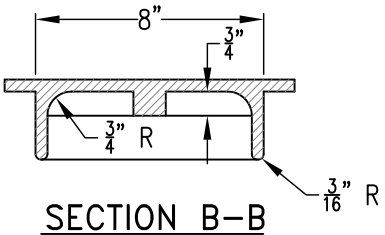

SECTION B–B

NOTE:
VALVE BOX COVER SHALL BE CONSTRUCTED OF DUCTILE IRON OR CAST IRON WITH MINIMUM TENSILE STRENGTH OF 25,000 P.S.I.

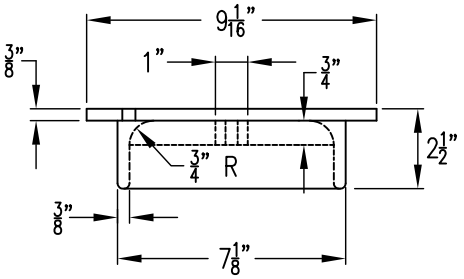

ELEVATION

SERVICE BOX COVERS

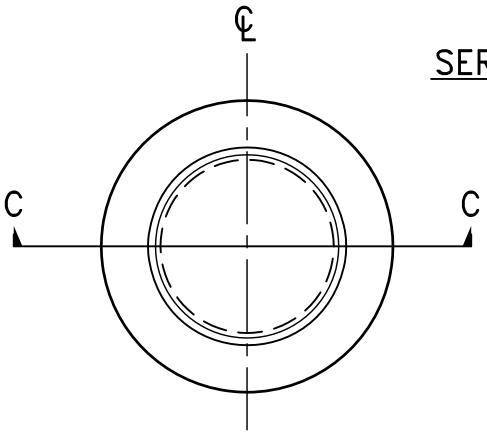

NOTE:
VALVE BOX SHALL BE CONSTRUCTED OF CAST IRON WITH MINIMUM TENSILE STRENGTH OF 25,000 P.S.I.

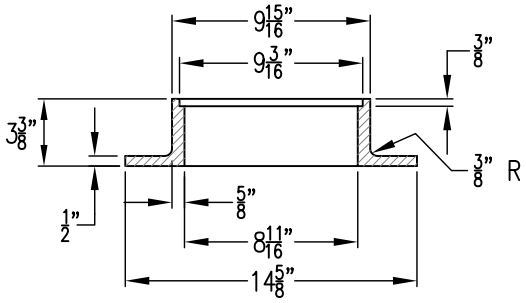

SECTION C–C
SERVICE BOX

REV.	DATE	DESCRIPTION
△		
△		
△		

CITY OF SACRAMENTO
DEPARTMENT OF UTILITIES

WATER SERVICE
BOX AND COVERS

APPR'D BY: Mike O. Booth NO SCALE
DATE: MAY 2007 DWG. NO. **W-307**

R:\Utilstds_New_Std_Details\Water_Utilities\W-307

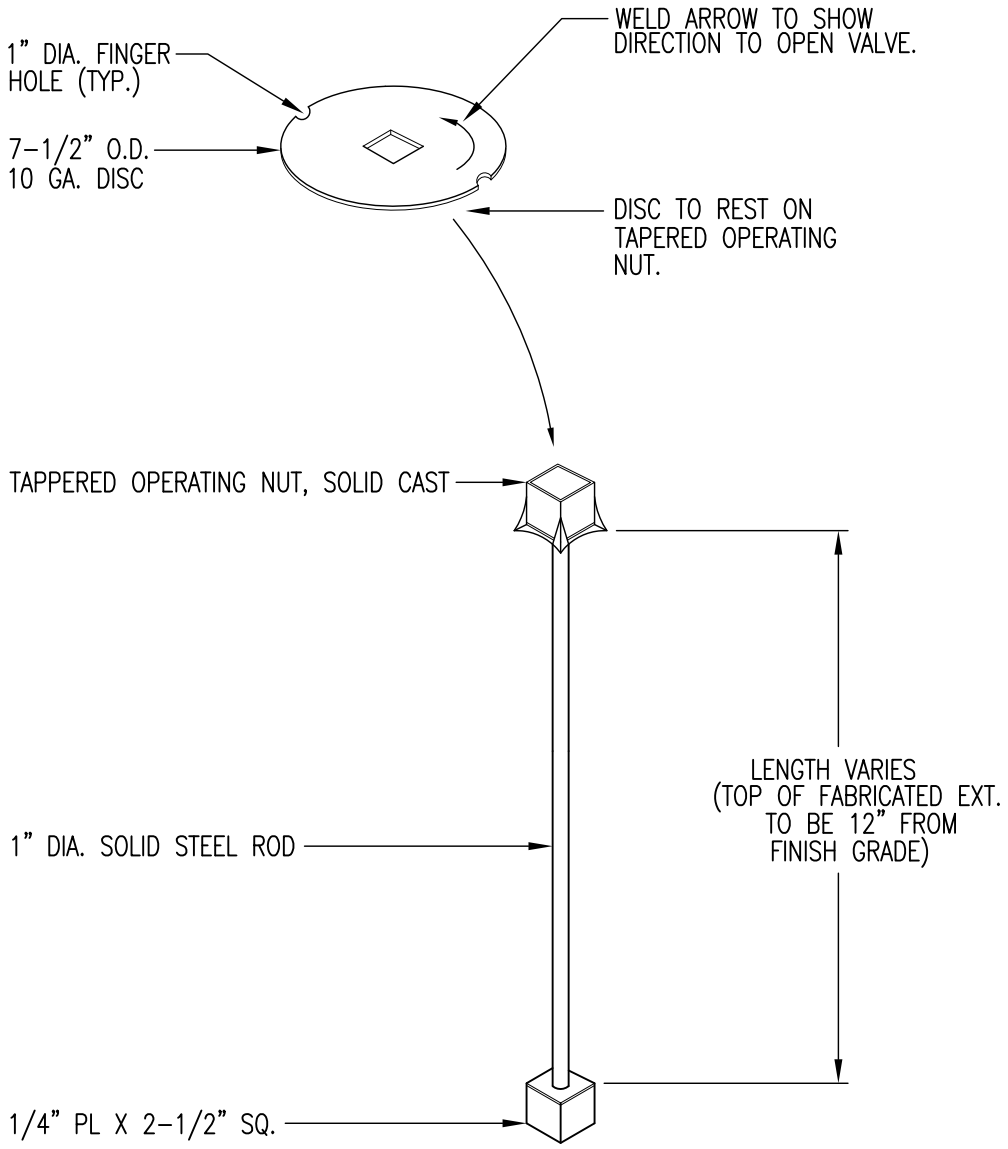

NOTES:

1. REQUIRED WHEN VALVE NUT IS IN EXCESS OF 30" BELOW FINISH GRADE.
2. SET TOP OF EXTENSION 12" BELOW GRADE.

REV.	DATE	DESCRIPTION
△		
△		
△		

CITY OF SACRAMENTO **DEPARTMENT OF UTILITIES**	VALVE OPERATING NUT EXTENSION	APPR'D BY: Mike O. Booth NO SCALE DATE: APRIL 2012 DWG. NO. **W-308**

R:\Utilstds_New_Std_Details\Water_Utilities\W-308

H-20 TRAFFIC LIDS

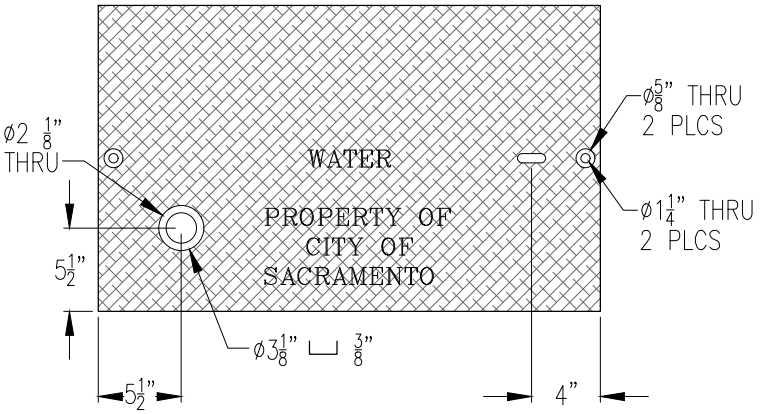

TIER 15 & TIER 22

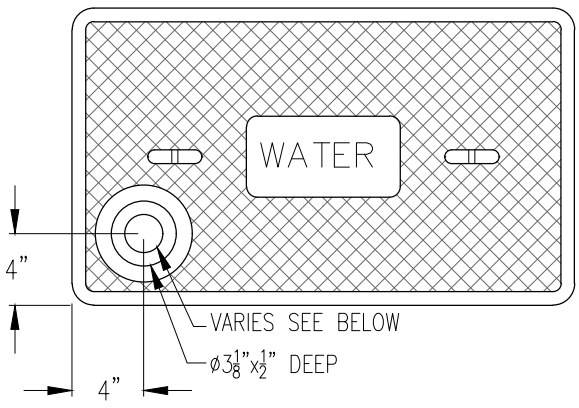

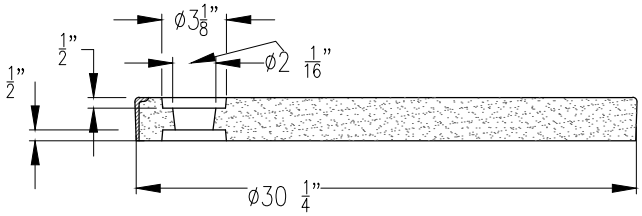

TIER 22

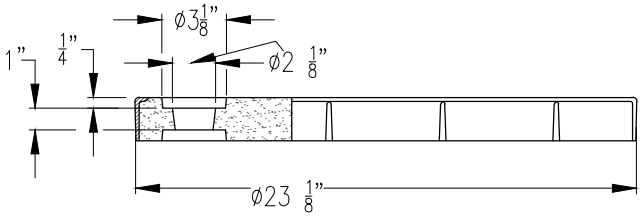

TIER 15

NOTES:

1. STEEL LIDS SHALL HAVE "PROPERTY OF CITY OF SACRAMENTO" WELDED ONTO THE TOP. THE LETTERS SHALL BE 1" IN HEIGHT.
2. FOR TRAFFIC INSTALLATIONS THE H-20 LID SHALL BE "LOCKED" INTO THE METER BOX BODY WITH A PENTA HEAD BOLT (0.84 P/F 18-8 STAINLESS), 3/8"-16x1 THREAD, WITH WASHER OR 3/8-7x3-1/2 ss PENTA HEAD AUGER BOLT.
3. THE METER BOXES AND LIDS SHALL BE FABRICATED BY THE SAME MANUFACTURER.
4. ALL LIDS SHALL BE MARKED "WATER", WITH A NOMINAL LETTERING HEIGHT OF 1-INCH.
5. ALLEYS & UNIMPROVED STREETS SHALL HAVE A TIER 22 BOX AND COVER FOR ALL 1" THRU 2" METERS. AND SIDEWALKS SHALL BE TIER 15.

TYPE AND SIZE BOXES:

1-INCH TO 2-INCH

FOR 1-INCH SERVICES THE NOMINAL METER BOX SIZE SHALL BE 13x24"Lx12"D. FOR 1 1/2-INCH AND 2-INCH SERVICES THE NOMINAL SIZE SHALL BE 17"Wx30"Lx12"D.

3-INCH TO 8-INCH

FOR 3" AND LARGER SERVICES LIDS SHALL HAVE TWO 1 3/4" DIAMETER HOLE WITH A 3-1/8" DIAMETER, 1/2" DEEP RECESSED AREA CENTERED OVER THE 1 3/4" DIAMETER HOLE.
3" AND 4" IN TRAFFIC = 3048 BOX W/ H20 RATED COVER
3" AND 4" IN PLANTER AREA = B48 BOX WITH 2 PIECE STEEL COVER B48-62D w/READING LID.
6" & 8" IN PLANTER AREA= B52 BOX WITH 2 PIECE B52-62B w/READING LID.
6" & 8" IN TRAFFIC AREA= R17 PIT W/ H20 RATED STEEL SPRING LOADED COVER
ONLY 3", 4", 6" AND 8" METER BOXES IN PLANTERS SHALL HAVE A READING LID.

REV.	DATE	DESCRIPTION
△		
△		
△		

R:\Utilstds_New_Std_Details\Meter_Retrofit_Details\W-400

CITY OF SACRAMENTO DEPARTMENT OF UTILITIES	METER BOX AND LIDS	APPR'D BY: NO SCALE DATE: May 10, 2019 DWG. NO. W-400

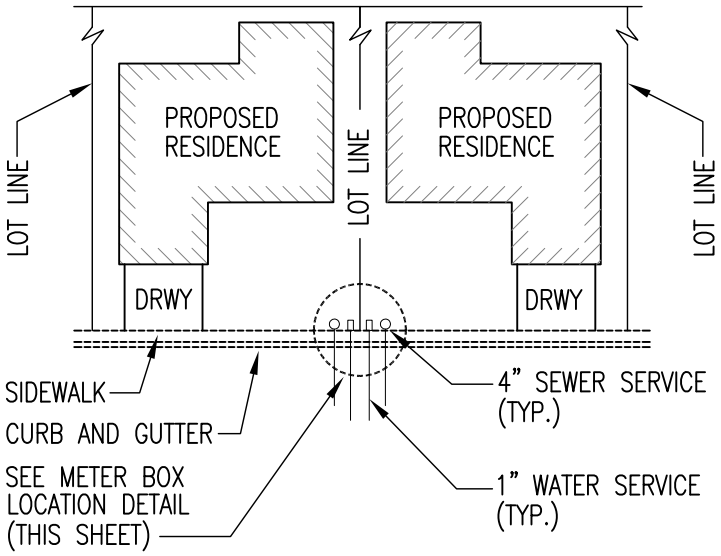

LOCATION OF RESIDENTIAL METERED WATER SERVICES

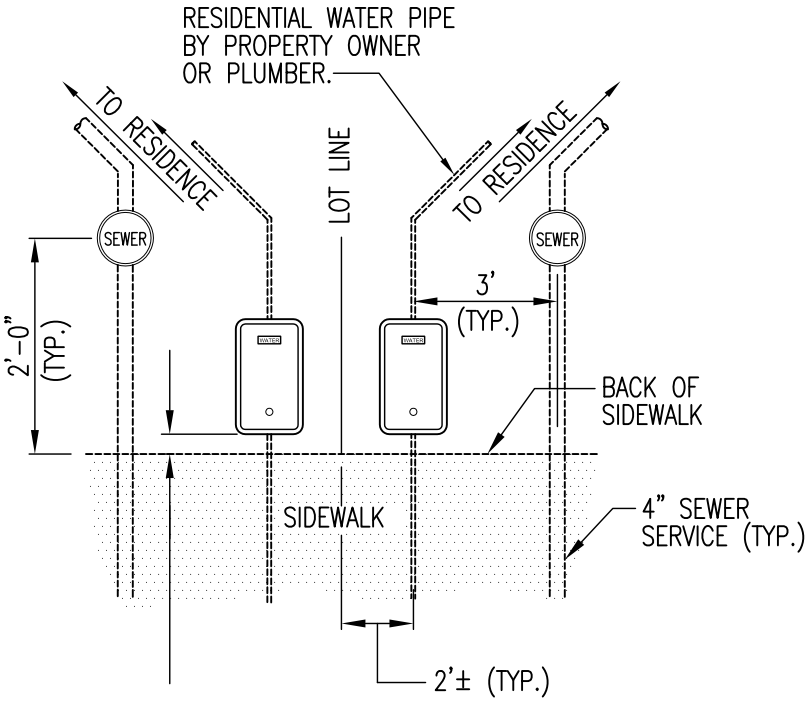

4" MIN., 6" MAX. FROM BACK OF SIDEWALK OR
4" MIN., 6" MAX. FROM BACK OF CURB IF SIDEWALK
IS NOT CONTIGUOUS WITH CURB AND GUTTER.

MIN. 3' FROM STREET LIGHTS
MIN. 3' FROM FIRE HYDRANTS
MIN. 5' FROM DRAIN INLETS

RESIDENTIAL METER BOX LOCATION DETAIL

REV.	DATE	DESCRIPTION
△		
△		
△		

CITY OF SACRAMENTO
DEPARTMENT OF UTILITIES

LOCATION OF RESIDENTIAL
WATER METERS-NEW CONSTRUCTION

APPR'D BY: _____ NO SCALE
DATE: SEPT 8, 2017 DWG. NO. **W-401**

R:\Utilstds_New_Std_Details\Water_Utilities\W-401

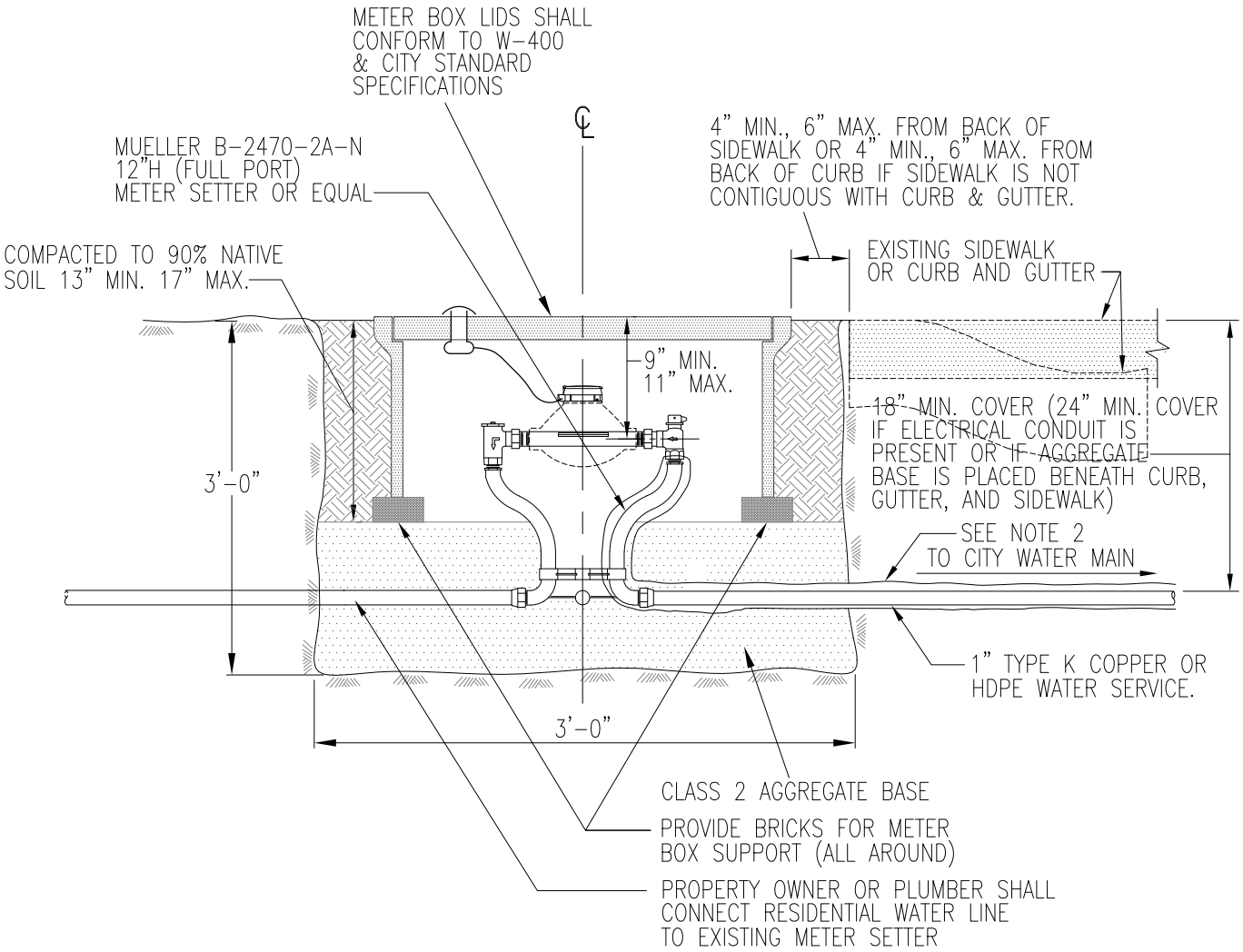

NOTE:

1. CITY FORCES WILL FURNISH AND INSTALL WATER METER AFTER PLUMBING PERMIT HAS BEEN ISSUED, AND METER FEES HAVE BEEN PAID. PROPERTY WILL NOT PASS FINAL INSPECTION WITHOUT WATER METER.
2. 6 MIL POLYETHYLENE WRAP WITH 10 MIL TAPE IS REQUIRED ON COPPER SERVICE (ONLY).
3. FOR STREETS INSTALLATIONS, METER BOXES SHALL BE CONSTRUCTED OF AN H20 TRAFFIC RATED (PER AASHTO-H20 LOAD TEST) CONCRETE MATERIAL AND SHALL MEET THE CAL TRANS No. 5T OR 6T STATE SPECIFICATION. LIDS SHALL BE H20 RATED. ALL LIDS SHALL BE PER CITY STD W-400.
4. ALLEYS AND UNIMPROVED STREET SHALL HAVE A TIER 22 BOX AND COVER FOR ALL 1" TO 2" METERS.

REV.	DATE	DESCRIPTION
△		
△		
△		

CITY OF SACRAMENTO DEPARTMENT OF UTILITIES	INSTALLATION OF RESIDENTIAL WATER METER SETTER & BOX	APPR'D BY: _____ NO SCALE DATE: JULY 28, 2017 DWG. NO. W-402

R:\Utilstds_New_Std_Details\Water_Utilities\W-402

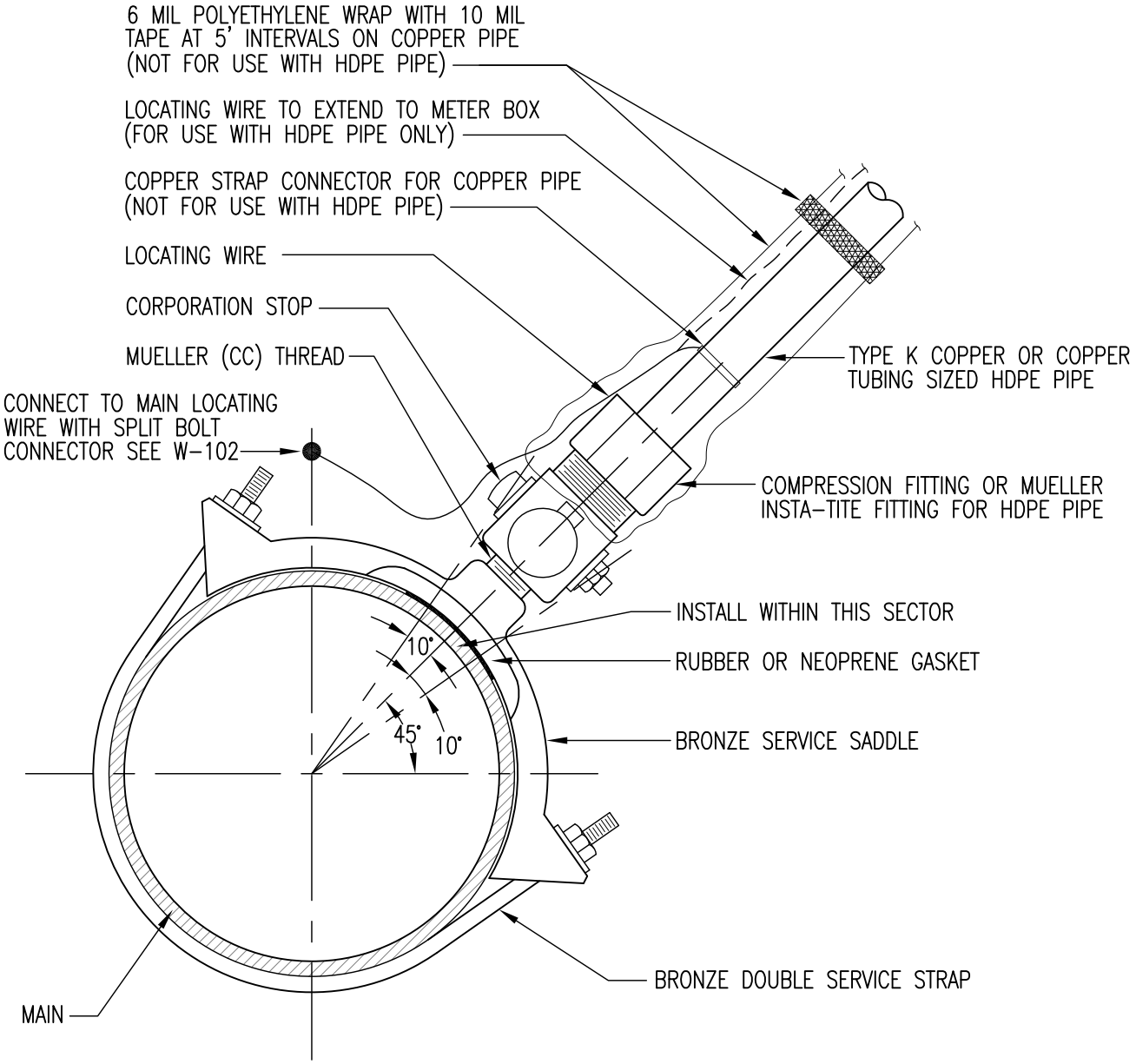

NOTES:

1. ALL CORPORATION STOPS TO HAVE A.W.W.A. STANDARD CORPORATION STOP THREAD (MUELLER CC) ON INLET END. OUTLET END CONNECTIONS SHALL BE FLARED OR COMPRESSION FITTINGS.
2. A BRONZE DOUBLE STRAP SERVICE SADDLE IS REQUIRED ON ALL WATER SERVICE TAPS 1" THRU 2" EXCEPT C-900. FOR C-900 SADDLE SHALL BE CAMBRIDGE SERIES 811 OR EQUAL.

REV.	DATE	DESCRIPTION
△		
△		
△		

CITY OF SACRAMENTO **DEPARTMENT OF UTILITIES**	STD WATER SERVICE TAPS 1-INCH THRU 2-INCH	APPR'D BY: _____ NO SCALE DATE: SEPT 6, 2017 DWG. NO. **W-403**

R:\Utilstds_New_Std_Details\Water_Utilities\W-403

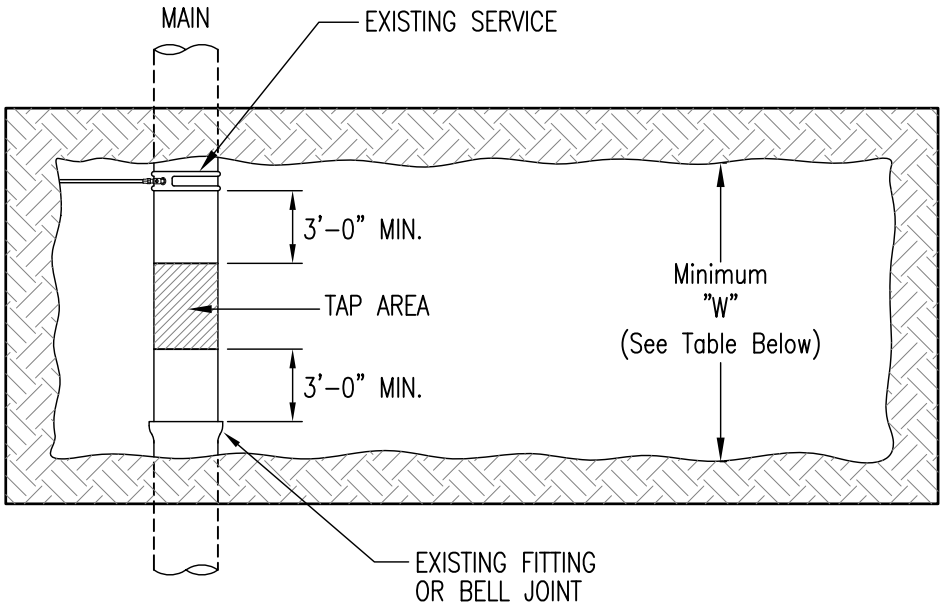

NOTE:
CLEAR SEPARATION OF 3'-0"
SHALL BE MAINTAINED BETWEEN
ALL FITTINGS, BELLS, SADDLES, ETC.

PLAN VIEW

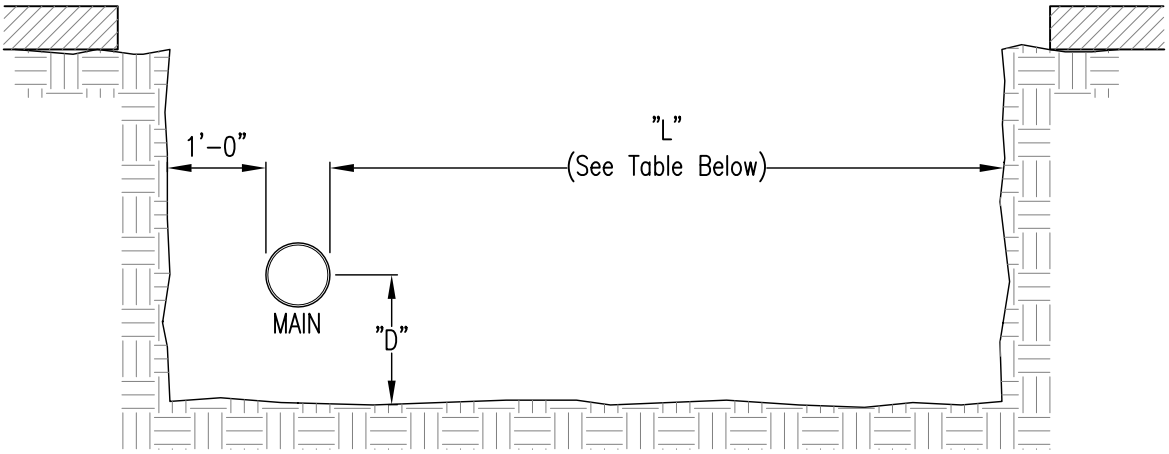

SECTION VIEW

TAP EXCAVATION REQUIREMENTS				
MAIN SIZE	TAP SIZE	DIMENSION "W"	DIMENSION "L"	DEPTH "D"
≤ 12"	1"-2" 4"-6" 8"-12"	3'-0" 4'-0" 5'-0"	5'-0" 9'-0" 9'-0"	1'-6"
> 12"	12"	7'-0"	9'-0"	4'-0"

NOTE:
CONTRACTOR SHALL ENSURE TRENCH SAFETY AND TRAFFIC CONTROL.

REV.	DATE	DESCRIPTION
△		
△		
△		

CITY OF SACRAMENTO
DEPARTMENT OF UTILITIES

TAP EXCAVATION REQUIREMENTS

APPR'D BY: _____ NO SCALE
DATE: SEPT 6, 2017 DWG. NO. **W-404**

R:\Utilstds_New_Std_Details\Water_Utilities\W-404

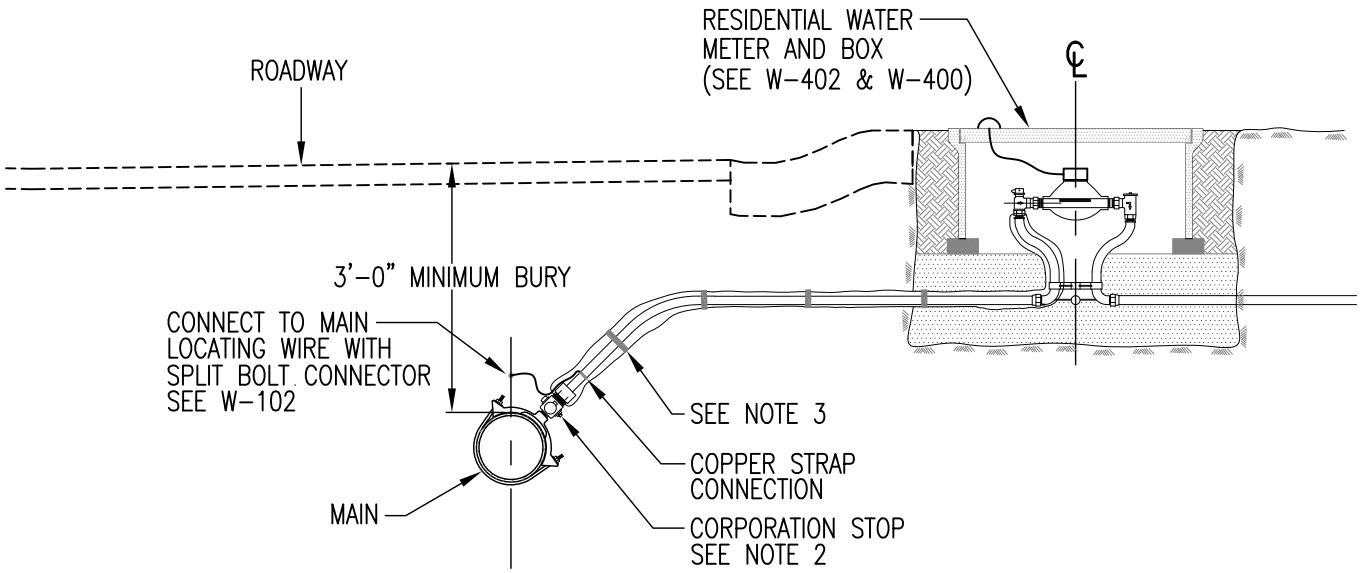

COPPER SERVICE INSTALLATION

NOTES:

1. COPPER TUBING AND METER SETTER TO BE SAME SIZE AS CORPORATION STOP.
2. SEE STANDARD DRAWING W-403 FOR DETAIL OF CONNECTION TO MAIN.
3. 6 MIL POLYETHYLENE WRAP WITH 10 MIL TAPE @ 5' INTERVALS SHALL BE REQUIRED.

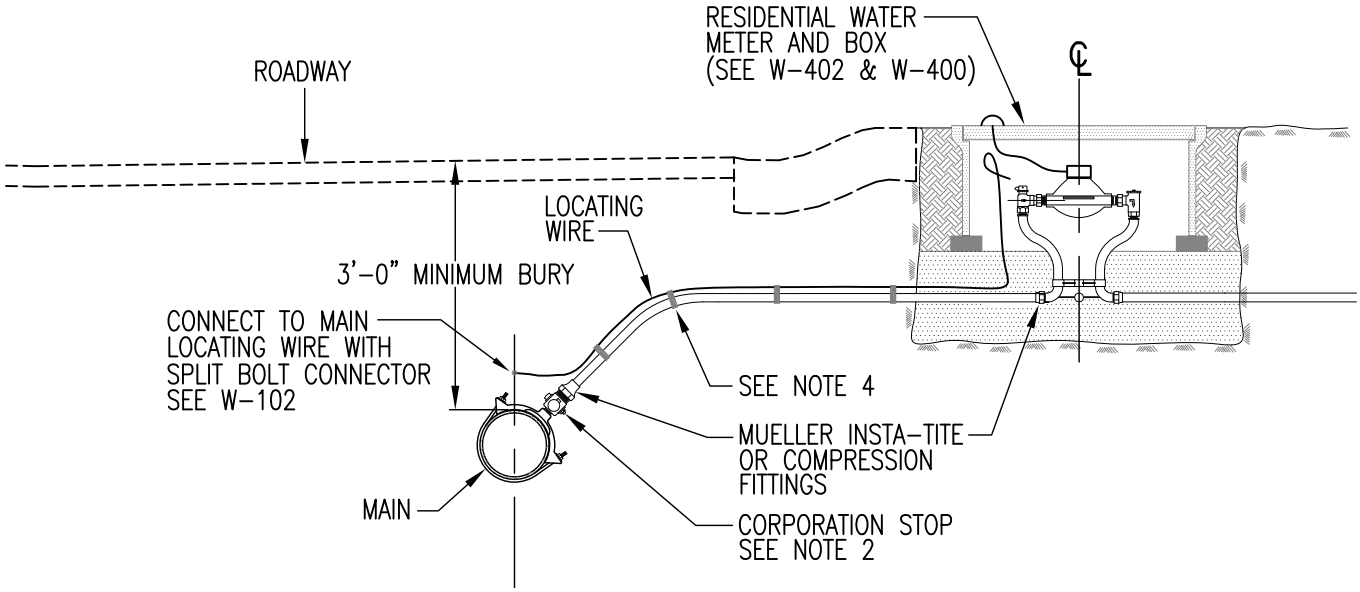

HDPE SERVICE INSTALLATION

NOTES:

1. COPPER TUBING SIZE HDPE PIPE AND METER SETTER TO BE SAME SIZE AS CORPORATION STOP.
2. SEE STANDARD DRAWING W-403 FOR DETAIL OF CONNECTION TO MAIN.
3. LOCATING WIRE TERMINATING IN METER BOX SHALL EXTEND INSIDE BOX A MINIMUM OF 10".
4. CONNECT LOCATING WIRE TO HDPE USING 10 MIL TAPE @ 3' INTERVALS.

REV.	DATE	DESCRIPTION
△		
△		
△		

CITY OF SACRAMENTO
DEPARTMENT OF UTILITIES

1" RES. WATER SERVICES

APPR'D BY: _____ NO SCALE

DATE: SEPT 6, 2017 DWG. NO. **W-405**

R:\Utilstds_New_Std_Details\Water_Utilities\W-405

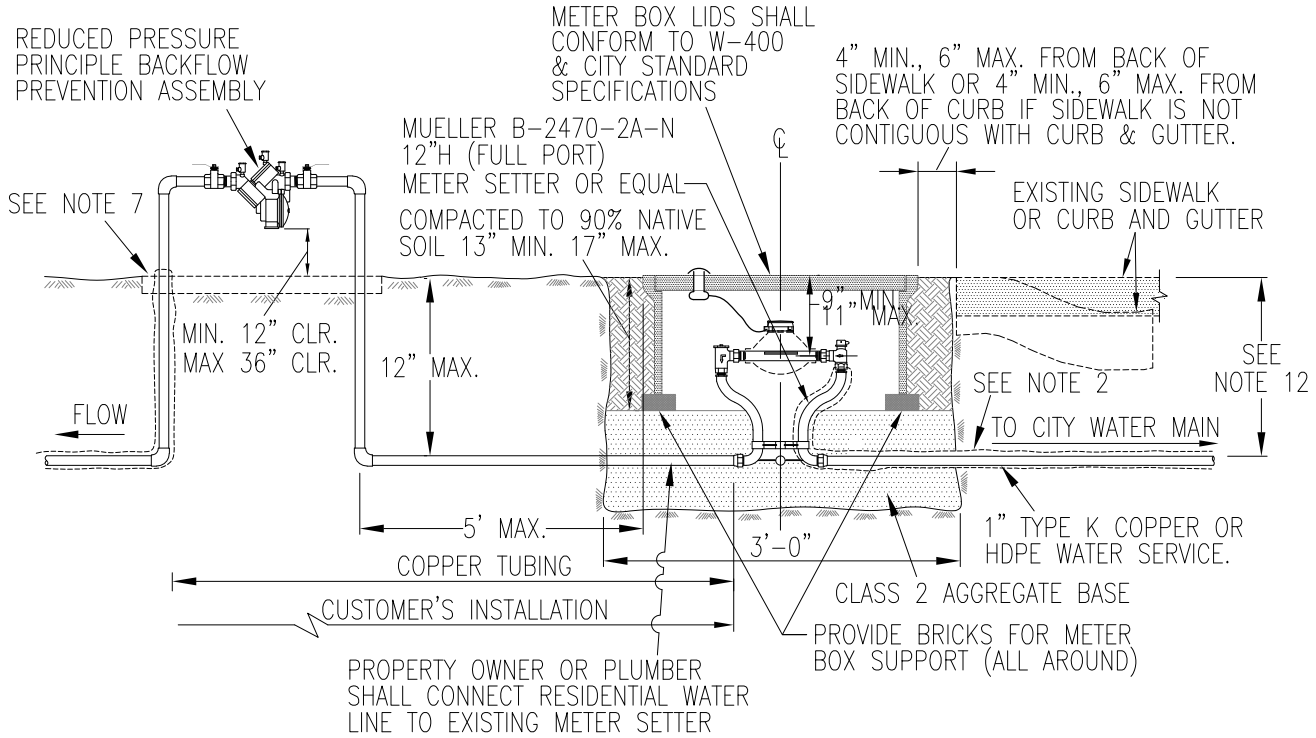

NOTES:

1. INSTALLATION AND TESTING SHALL BE IN ACCORDANCE WITH THE CURRENT CROSS CONNECTION CONTROL POLICY.
2. REDUCED PRESSURE BACKFLOW PREVENTION ASSEMBLIES SHALL BE CONNECTED TO CITY WATER AND TESTED PRIOR TO BEING PLACED INTO SERVICE.
3. POINT OF SERVICE:
   A. POINT OF SERVICE IS THE BACK OF CURB FOR ALL CITY STREETS WITH PLANTER STRIPS.
   B. POINT OF SERVICE IS THE BACK OF SIDEWALK FOR STREETS WITH SIDEWALK CONTIGUOUS WITH CURB AND GUTTER.
   C. POINT OF SERVICE IS THE RIGHT-OF-WAY LINE ON ALL ALLEYS AND UNIMPROVED STREETS.
   D. WHERE THE POINT OF SERVICE IS UNCLEAR THE LOCATION SHALL BE DETERMINED BY THE CROSS CONNECTION CONTROL SPECIALIST.
4. LISTS OF APPROVED BACKFLOW PREVENTION ASSEMBLIES AND CERTIFIED BACKFLOW PREVENTION ASSEMBLY TESTERS ARE AVAILABLE AT THE DEPARTMENT OF UTILITIES CUSTOMER SERVICE COUNTER LOCATED AT 1395 35TH AVE.
5. THE BACKFLOW PREVENTION ASSEMBLIES SHALL BE INSTALLED ABOVE GROUND, IN A HORIZONTAL AND LEVEL POSITION. THE ASSEMBLY SHALL BE LOCATED ON THE CUSTOMER'S SIDE AND NO FURTHER THAN FIVE (5) FEET FROM THE POINT OF SERVICE OR THE METER.
6. OUTLETS, TAPS, TEES, OR CONNECTIONS BETWEEN THE WATER MAIN AND BACKFLOW PREVENTER ARE NOT ALLOWED.
7. CONCRETE PAD IS RECOMMENDED IF ASSEMBLY IS PLACED WITHIN A PROTECTIVE ENCLOSURE.
8. FREEZE BAGS ARE RECOMMENDED FOR FREEZE PROTECTION.
9. 6 MIL POLYETHYLENE WRAP WITH 10 MIL TAPE IS REQUIRED FOR ALL UNDERGROUND COPPER TUBING.
10. FOR STREETS INSTALLATIONS, METER BOXES SHALL BE CONSTRUCTED OF AN H20 TRAFFIC RATED (PER AASHTO-H20 LOAD TEST) CONCRETE MATERIAL AND SHALL MEET THE CAL TRANS No. 5T OR 6T STATE SPECIFICATION. LIDS SHALL BE H20 RATED. ALL LIDS SHALL BE PER CITY STD W-400.
11. ALLEYS AND UNIMPROVED STREET SHALL HAVE A TIER 22 BOX AND COVER FOR ALL 1" TO 2" METERS.
12. 18" MIN. COVER (24" MIN. COVER IF ELECTRICAL CONDUIT IS PRESENT OR IF AGGREGATE BASE IS PLACED BENEATH CURB, GUTTER, AND SIDEWALK).
13. CITY FORCES WILL FURNISH AND INSTALL WATER METER AFTER PLUMBING PERMIT HAS BEEN ISSUED, AND METER FEES HAVE BEEN PAID. PROPERTY WILL NOT PASS FINAL INSPECTION WITHOUT WATER METER.

REV.	DATE	DESCRIPTION
△		
△		
△		

CITY OF SACRAMENTO DEPARTMENT OF UTILITIES	INSTALLATION OF 1 INCH RP ASSEMBLY WITH WATER METER	APPR'D BY: _____ NO SCALE DATE: NOV 14, 2017 DWG. NO. W-406

R:\Utilstds_New_Std_Details\Water_Utilities\W-406

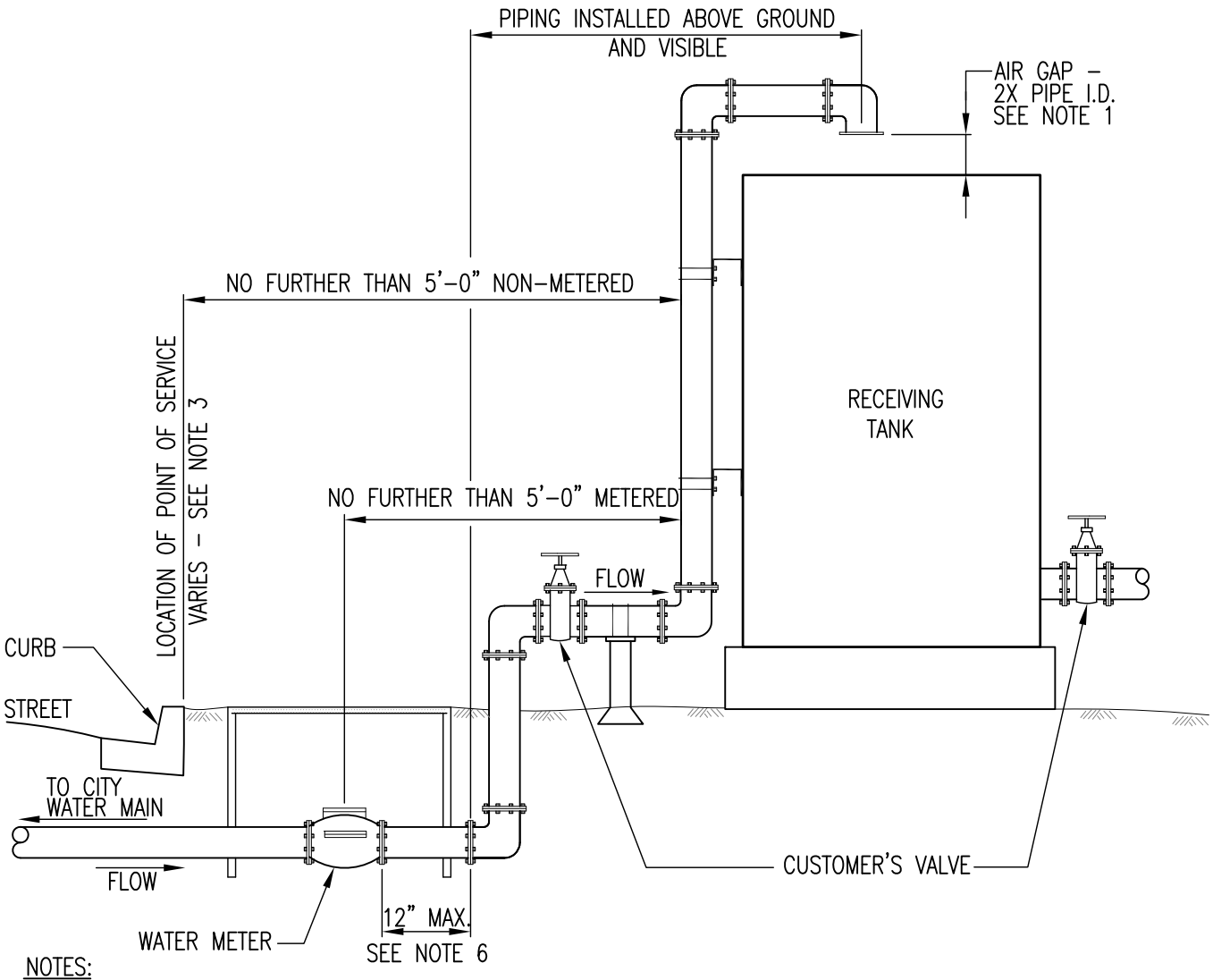

NOTES:

1. "AIR GAP SEPARATION" SHALL MEAN A PHYSICAL SEPARATION BETWEEN THE DISHCARGE END OF A POTABLE WATER SUPPLY PIPELINE AND AN OPEN OR NON–PRESSURE RECEIVING VESSEL. AN "APPROVED AIR–GAP SEPARATION" SHALL BE AT LEAST DOUBLE THE DIAMETER OF THE SUPPLY PIPE MEASURED VERTICALLY ABOVE THE OVERFLOW RIM OF THE RECEIVING VESSEL AND IN NO CASE SHALL BE LESS THAN 1 INCH.
2. OUTLETS, TAPS, TEES, OR CONNECTIONS BETWEEN THE WATER MAIN AND AIR GAP SEPARATION ARE NOT ALLOWED UNLESS OTHERWISE APPROVED BY THE CROSS CONNECTION CONTROL SPECIALIST.
3. POINT OF SERVICE:
   A. POINT OF SERVICE IS THE BACK OF CURB FOR ALL CITY STREETS WITH PLANTER STRIPS.
   B. POINT OF SERVICE IS THE BACK OF SIDEWALK FOR STREETS WITH SIDEWALK CONTIGUOUS WITH CURB AND GUTTER.
   C. POINT OF SERVICE IS THE RIGHT–OF–WAY LINE ON ALL ALLEYS AND UNIMPROVED STREETS.
   D. WHERE THE POINT OF SERVICE IS UNCLEAR THE LOCATION SHALL BE DETERMINED BY THE CROSS CONNECTION CONTROL SPECIALIST.
4. PVC PIPE SHALL NOT BE USED FOR THE ABOVE GROUND PORTION OF THE INSTALLATION.
5. APPROVED AIR GAP SEPARATION SHALL BE INSTALLED WITHIN 5 FEET FROM THE POINT OF SERVICE OR 5 FEET FROM THE METER UNLESS OTHERWISE APPROVED BY THE CROSS CONNECTION CONTROL SPECIALIST.
6. PIPING INSTALLED BELOW GROUND SHALL NOT EXCEED 12 INCHES FROM THE POINT OF SERVICE OR 12 INCHES FROM THE METER IF METER IS REQUIRED.
7. INSPECTION SHALL BE BY CROSS CONNECTION CONTROL SPECIALIST.

REV.	DATE	DESCRIPTION
△		
△		
△		

CITY OF SACRAMENTO
DEPARTMENT OF UTILITIES

APPROVED INSTALLATION FOR AIR GAP SEPARATION

APPR'D BY: Melvin O. Booth NO SCALE
DATE: MAY 2007 DWG. NO. **W-501**

R:\Utilstds_New_Std_Details\Water_Utilities\W-501

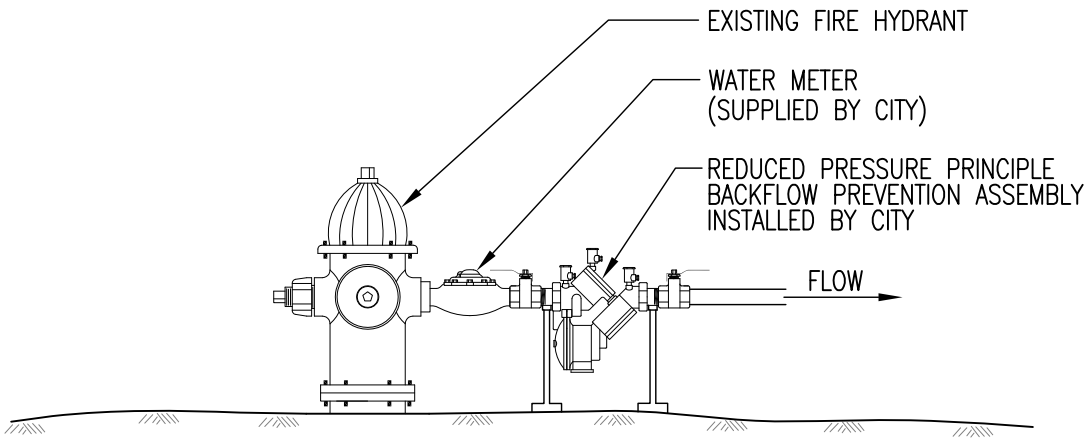

2" TEMPORARY METERED WATER SERVICE WITH REDUCED PRESSURE PRINCIPLE BACKFLOW PREVENTION ASSEMBLY

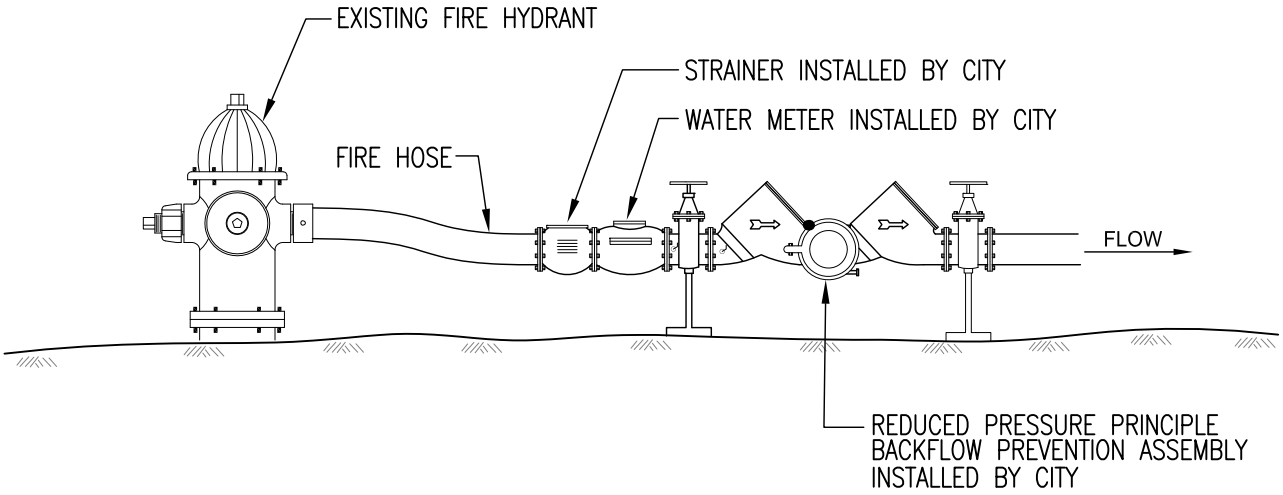

4" METERED TEMPORARY WATER SERVICE WITH REDUCED PRESSURE PRINCIPLE BACKFLOW PREVENTION ASSEMBLY

NOTES:

1. CONTRACTOR/CUSTOMER SHALL BE RESPONSIBLE FOR THE SECURITY AND CONDITION OF THE METER & BACKFLOW ASSEMBLY FOR DURATION OF THE HYDRANT USE PERMIT.
2. CONTRACTOR/CUSTOMER SHALL CONTACT METER SHOP SUPERVISOR AT 808-4891 FOR METER & BACKFLOW ASSEMBLY PICK UP.
3. DAMAGED OR STOLEN METER OR BACKFLOW ASSEMBLY WILL RESULT IN FORFEITURE OF SECURITY DEPOSIT.
4. CITY TO PROVIDE TESTING AND INSTALLATION UPON PAYMENT OF SECURITY DEPOSIT.
5. NO HOSES SHALL CROSS STREETS OR TRAFFIC AREAS.

REV.	DATE	DESCRIPTION
△		
△		
△		

CITY OF SACRAMENTO **DEPARTMENT OF UTILITIES**	INSTALLATION OF METERED TEMP. WTR SVC W/BACKFLOW PREVENTERS	APPR'D BY: Mike O. Brooks NO SCALE DATE: APRIL 2012 DWG. NO. **W-504**

R:\Utilstds_New_Std_Details\Water_Utilities\W-504

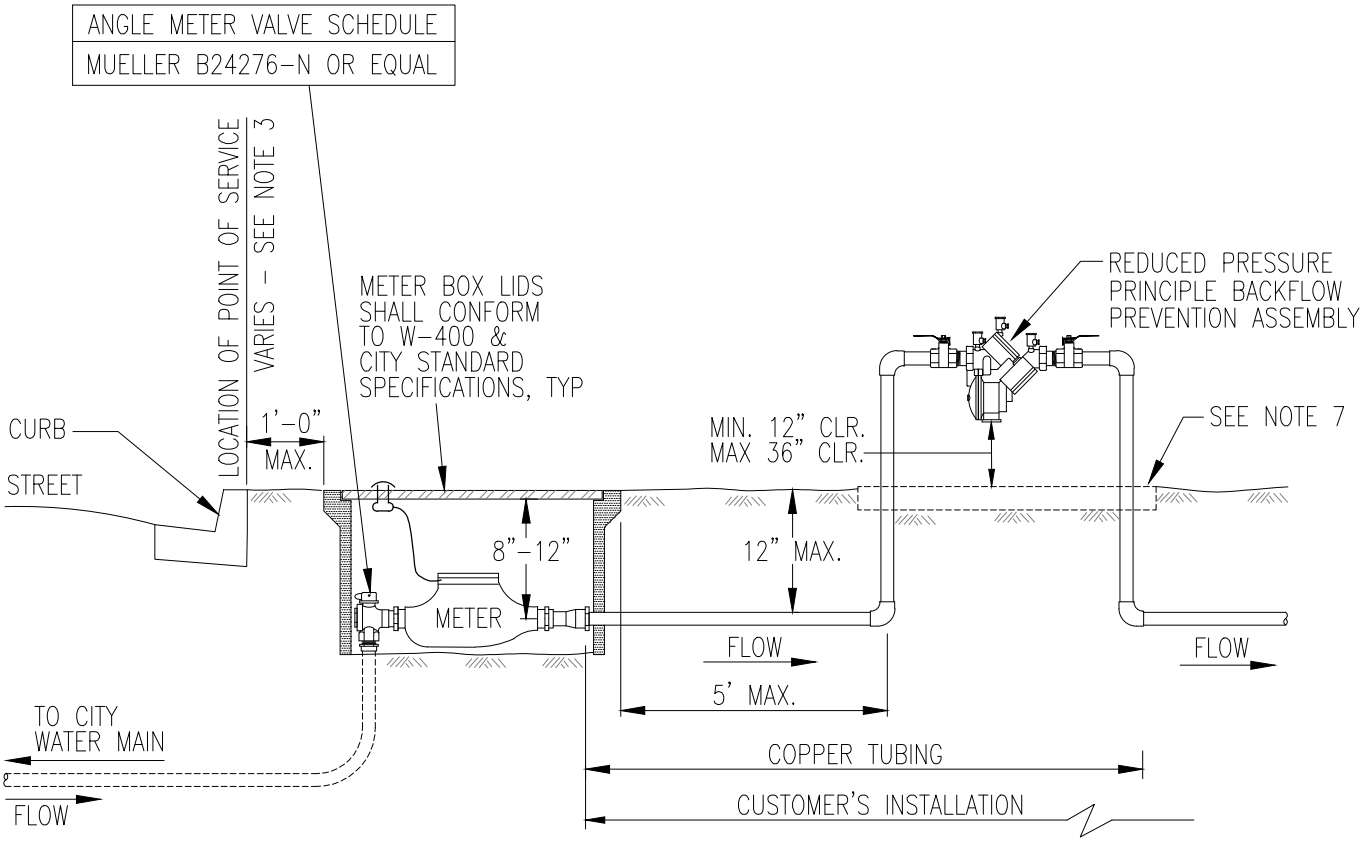

INSTALLATION OF 1 1/2 TO 2-INCH REDUCED PRESSURE PRINCIPLE BACKFLOW PREVENTION ASSEMBLY W/WATER METER

NOTES:

1. INSTALLATION AND TESTING SHALL BE IN ACCORDANCE WITH THE CURRENT CROSS CONNECTION CONTROL POLICY.
2. REDUCED PRESSURE BACKFLOW PREVENTION ASSEMBLIES SHALL BE CONNECTED TO CITY WATER AND TESTED PRIOR TO BEING PLACED INTO SERVICE.
3. POINT OF SERVICE:
   A. POINT OF SERVICE IS THE BACK OF CURB FOR ALL CITY STREETS WITH PLANTER STRIPS.
   B. POINT OF SERVICE IS THE BACK OF SIDEWALK FOR STREETS WITH SIDEWALK CONTIGUOUS WITH CURB AND GUTTER.
   C. POINT OF SERVICE IS THE RIGHT-OF-WAY LINE ON ALL ALLEYS AND UNIMPROVED STREETS.
   D. WHERE THE POINT OF SERVICE IS UNCLEAR THE LOCATION SHALL BE DETERMINED BY THE CROSS CONNECTION CONTROL SPECIALIST.
4. LISTS OF APPROVED BACKFLOW PREVENTION ASSEMBLIES AND CERTIFIED BACKFLOW PREVENTION ASSEMBLY TESTERS ARE AVAILABLE AT THE DEPARTMENT OF UTILITIES CUSTOMER SERVICE COUNTER LOCATED AT 1395 35TH AVE.
5. THE BACKFLOW PREVENTION ASSEMBLIES SHALL BE INSTALLED ABOVE GROUND, IN A HORIZONTAL AND LEVEL POSITION. THE ASSEMBLY SHALL BE LOCATED ON THE CUSTOMER'S SIDE AND NO FURTHER THAN FIVE (5) FEET FROM THE POINT OF SERVICE OR THE METER.
6. OUTLETS, TAPS, TEES, OR CONNECTIONS BETWEEN THE WATER MAIN AND BACKFLOW PREVENTER ARE NOT ALLOWED.
7. CONCRETE PAD IS RECOMMENDED IF ASSEMBLY IS PLACED WITHIN A PROTECTIVE ENCLOSURE.
8. FREEZE BAGS ARE RECOMMENDED FOR FREEZE PROTECTION.
9. 6 MIL POLYETHYLENE WRAP WITH 10 MIL TAPE IS REQUIRED FOR ALL UNDERGROUND COPPER TUBING.
10. FOR STREETS INSTALLATIONS, METER BOXES SHALL BE CONSTRUCTED OF AN H20 TRAFFIC RATED (PER AASHTO-H20 LOAD TEST) CONCRETE MATERIAL AND SHALL MEET THE CAL TRANS No. 5T OR 6T STATE SPECIFICATION. LIDS SHALL BE H20 RATED. ALL LIDS SHALL BE PER CITY STD W-400.
11. ALLEYS AND UNIMPROVED STREET SHALL HAVE A TIER 22 BOX AND COVER FOR ALL 1" TO 2" METERS.

REV.	DATE	DESCRIPTION
△		
△		
△		

CITY OF SACRAMENTO DEPARTMENT OF UTILITIES	INSTALLATION OF 1 1/2 TO 2-INCH RP ASSEMBLY WITH WATER METER	APPR'D BY: NO SCALE DATE: SEPT 8, 2017 DWG. NO. W-505

R:\Utilstds_New_Std_Details\Water_Utilities\W-505

ANGLE METER VALVE SCHEDULE
1-1/2" TO 2" = MUELLER B24276-N OR EQUAL

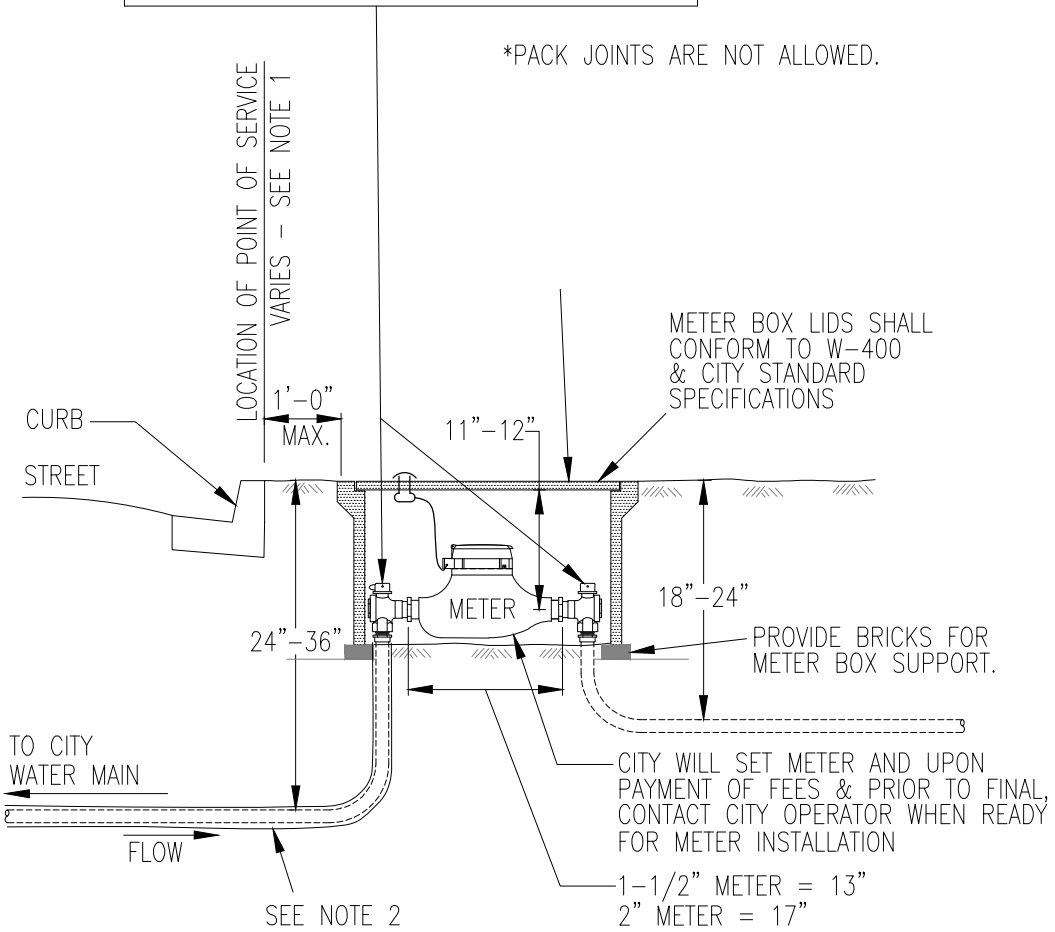

1 1/2" & 2" METERED WATER SERVICE INSTALLATION WITHOUT REDUCED PRESSURE PRINCIPLE ASSEMBLY

NOTES:

1. POINT OF SERVICE:
   A. POINT OF SERVICE IS THE BACK OF CURB FOR ALL CITY STREETS WITH PLANTER STRIPS.
   B. POINT OF SERVICE IS THE BACK OF SIDEWALK FOR STREETS WITH SIDEWALK CONTIGUOUS WITH CURB AND GUTTER.
   C. POINT OF SERVICE IS THE RIGHT-OF-WAY LINE ON ALL ALLEYS AND UNIMPROVED STREETS.
   D. WHERE THE POINT OF SERVICE IS UNCLEAR THE LOCATION SHALL BE DETERMINED BY THE DEPTARTMENT OF UTILITIES METER SUPERVISOR.
2. 6 MIL POLYETHYLENE WRAP WITH 10 MIL TAPE IS REQUIRED FOR ALL UNDERGROUND COPPER TUBING.
3. FOR STREETS INSTALLATIONS, METER BOXES SHALL BE CONSTRUCTED OF AN H20 TRAFFIC RATED (PER AASHTO-H20 LOAD TEST) CONCRETE MATERIAL AND SHALL MEET THE CAL TRANS No. 5T OR 6T STATE SPECIFICATION. LIDS SHALL BE H20 RATED. ALL LIDS SHALL BE PER CITY STD W-400.
4. ALLEYS AND UNIMPROVED STREET SHALL HAVE A TIER 22 BOX AND COVER FOR ALL 1" TO 2" METERS.

REV.	DATE	DESCRIPTION
△		
△		
△		

CITY OF SACRAMENTO DEPARTMENT OF UTILITIES	1 1/2" & 2" METERED WATER SERVICE WITH NO RP DEVICE	APPR'D BY: _____ NO SCALE DATE: SEPT 8, 2017 DWG. NO. W-507

R:\Utilstds_New_Std_Details\Water_Utilities\W-507

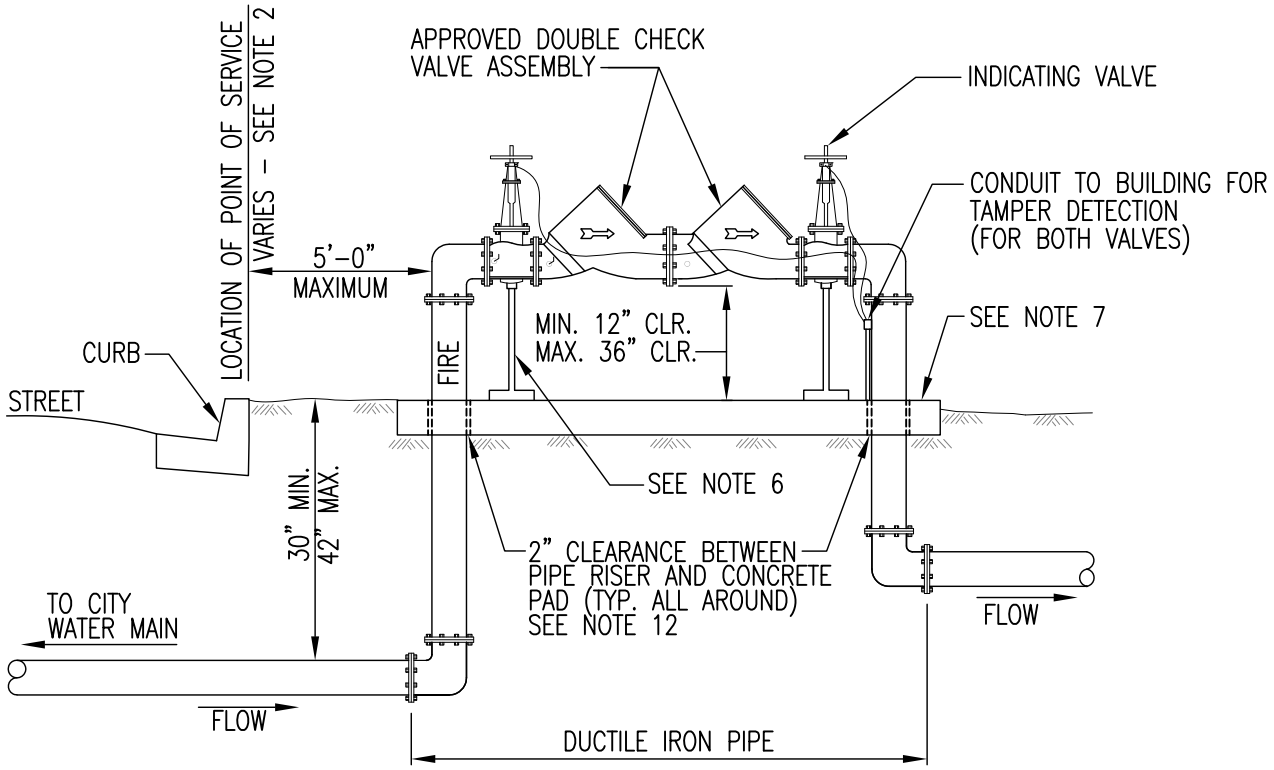

4-INCH AND LARGER FIRE SERVICE WITH APPROVED DOUBLE CHECK VALVE ASSEMBLY

NOTES:

1. DOUBLE CHECK VALVE ASSEMBLIES SHALL BE CONNECTED TO CITY WATER AND TESTED PRIOR TO BEING PLACED INTO SERVICE.
2. POINT OF SERVICE:
   A. POINT OF SERVICE IS THE BACK OF CURB FOR ALL CITY STREETS WITH PLANTER STRIPS.
   B. POINT OF SERVICE IS THE BACK OF SIDEWALK FOR STREETS WITH SIDEWALK CONTIGUOUS WITH CURB AND GUTTER.
   C. POINT OF SERVICE IS THE RIGHT-OF-WAY LINE ON ALL ALLEYS AND UNIMPROVED STREETS.
   D. WHERE THE POINT OF SERVICE IS UNCLEAR THE LOCATION SHALL BE DETERMINED BY THE CROSS CONNECTION CONTROL SPECIALIST.
3. LISTS OF APPROVED DOUBLE CHECK VALVE ASSEMBLIES AND CERTIFIED BACKFLOW PREVENTION ASSEMBLY TESTERS ARE AVAILABLE AT THE DEPARTMENT OF UTILITIES CUSTOMER SERVICE COUNTER LOCATED AT 1395 35TH AVENUE.
4. THE DOUBLE CHECK VALVE ASSEMBLIES SHALL BE INSTALLED ABOVE GROUND, IN A HORIZONTAL AND LEVEL POSITION. THE ASSEMBLY SHALL BE LOCATED ON THE CUSTOMER'S SIDE AND NO FURTHER THAN FIVE (5) FEET FROM THE POINT OF SERVICE.
5. OUTLETS, TAPS, TEES, OR CONNECTIONS BETWEEN THE WATER MAIN AND BACKFLOW PREVENTER ARE NOT ALLOWED.
6. SUPPORTS ARE REQUIRED FOR ASSEMBLIES.
7. CONCRETE PAD IS REQUIRED FOR ALL DOUBLE CHECK VALVE ASSEMBLIES ON FIRE SERVICES.
8. FOR SPECIFIC FIRE DEPARTMENT REQUIREMENTS, CONTACT CITY FIRE DEPARTMENT.
9. FREEZE BAG PROTECTION IS RECOMMENDED. BAGS USED FOR FREEZE PROTECTION SHALL BE LABELED "FIRE" IN A CONTRASTING COLOR. BAG SHALL HAVE OPENING FOR STEM IF OS&Y VALVES ARE USED.
10. BACKFLOW ASSEMBLIES MAY BE PAINTED RED AND PAINT SHALL NOT COVER THE MANUFACTURER'S IDENTIFICATION PLATE.
11. STANDARD SIGN IS REQUIRED TO BE INSTALLED ON BACKFLOW ASSEMBLY TO READ "FIRE SERVICE/CONNECTION". SIGN MUST BE PAINTED IN A CONTRASTING COLOR.
12. A 2" CLEARANCE SPACE MUST BE MAINTAINED AROUND ASSEMBLY PIPE RISERS AND CONCRETE PAD.
13. INSTALLATION AND TESTING SHALL BE IN ACCORDANCE WITH THE CURRENT CROSS CONNECTION CONTROL POLICY.

REV.	DATE	DESCRIPTION
△		
△		
△		

CITY OF SACRAMENTO
DEPARTMENT OF UTILITIES

4-INCH & LARGER FIRE SERVICE WITH DOUBLE CHECK VALVE ASSEMBLY

APPR'D BY: Mike O. Booth NO SCALE
DATE: MAY 2007 DWG. NO. **W-510**

R:\Utilstds_New_Std_Details\Water_Utilities\W-510

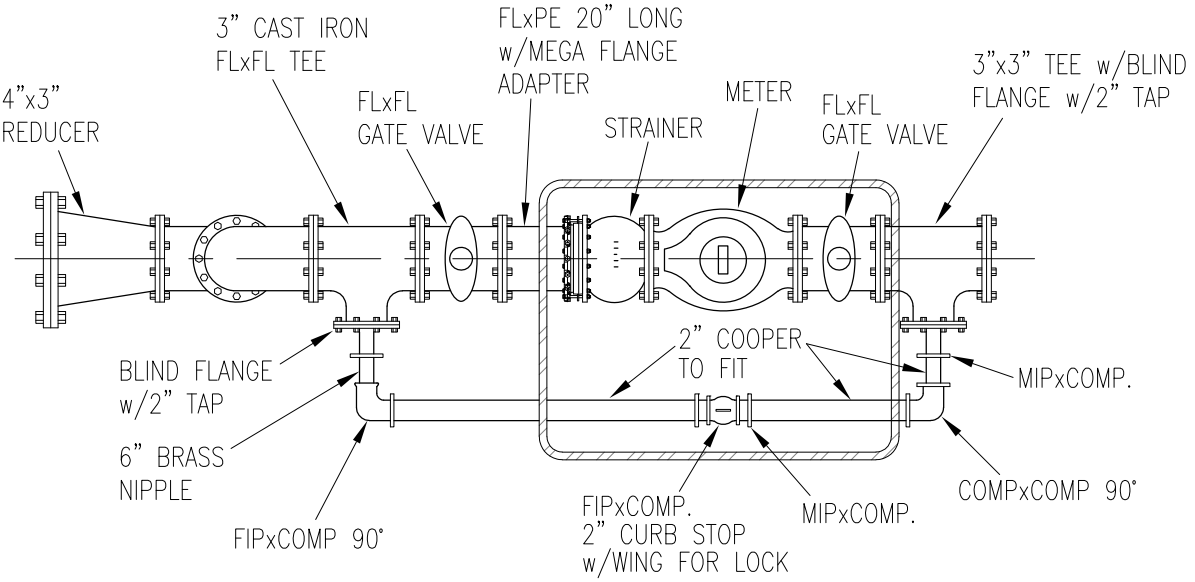

PLAN VIEW

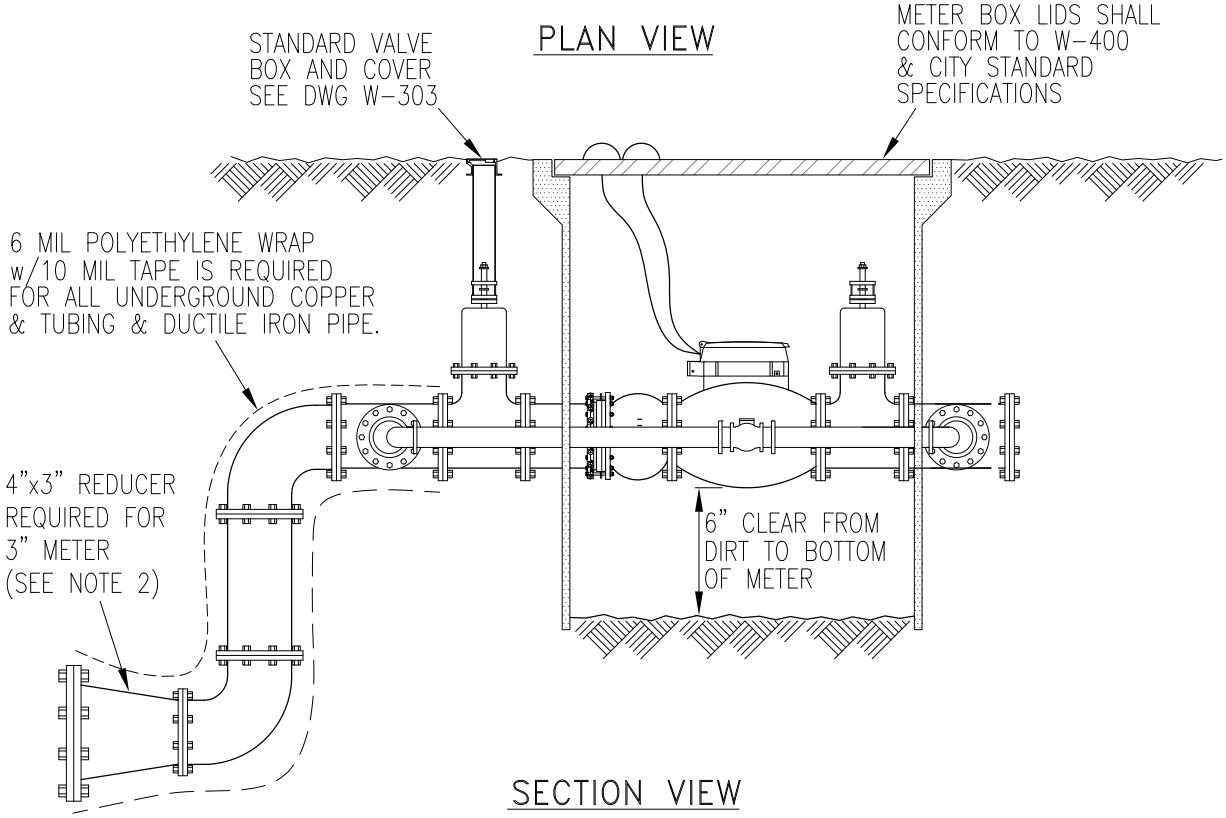

SECTION VIEW

TYPE AND SIZE BOXES:

3" AND 4" IN TRAFFIC = 3048 BOX W/ H20 RATED COVER
3" AND 4" IN PLANTER AREA= B48 BOX WITH 2 PIECE CONCRETE COVERS.
6" IN PLANTER AREA = B52 BOX WITH 3 PIECE CONCRETE COVERS
6" IN TRAFFIC AREA = R10 PIT W/ H20 TRAFFIC RATED STEEL SPRING LOADED COVER
8" IN PLANTER AREA = R17 PIT W/ 4 PIECE STEEL COVER
8" IN TRAFFIC AREA + R17 PIT W/ H20 RATED STEEL SPRING LOADED COVER

NOTE:

1. CONTACT METER SHOP SUPV. VIA CITY OPERATOR FOR METER/STRAINER LAY LENGTH.
2. 3" ON-SITE WATER SERVICE REQUIRES A 4" TAP, 4"x3" REDUCER, 3" METER AND 3" BACKFLOW ASSEMBLY. 4" AND LARGER METER REQUIRES TAP SIZE EQUIVALENT TO METER SIZE.

REV.	DATE	DESCRIPTION
△		
△		
△		

R:\Utilstds_New_Std_Details\Water_Utilities

CITY OF SACRAMENTO DEPARTMENT OF UTILITIES	3" - 8" WATER SERVICE BELOW GROUND WITH BYPASS (COMPOUND METERS)	APPR'D BY: _____ NO SCALE DATE: SEPT. 9, 2017 DWG. NO. W-515

ANGLE METER VALVE SCHEDULE
1-1/2" TO 2" = MUELLER B24276-N OR EQUAL

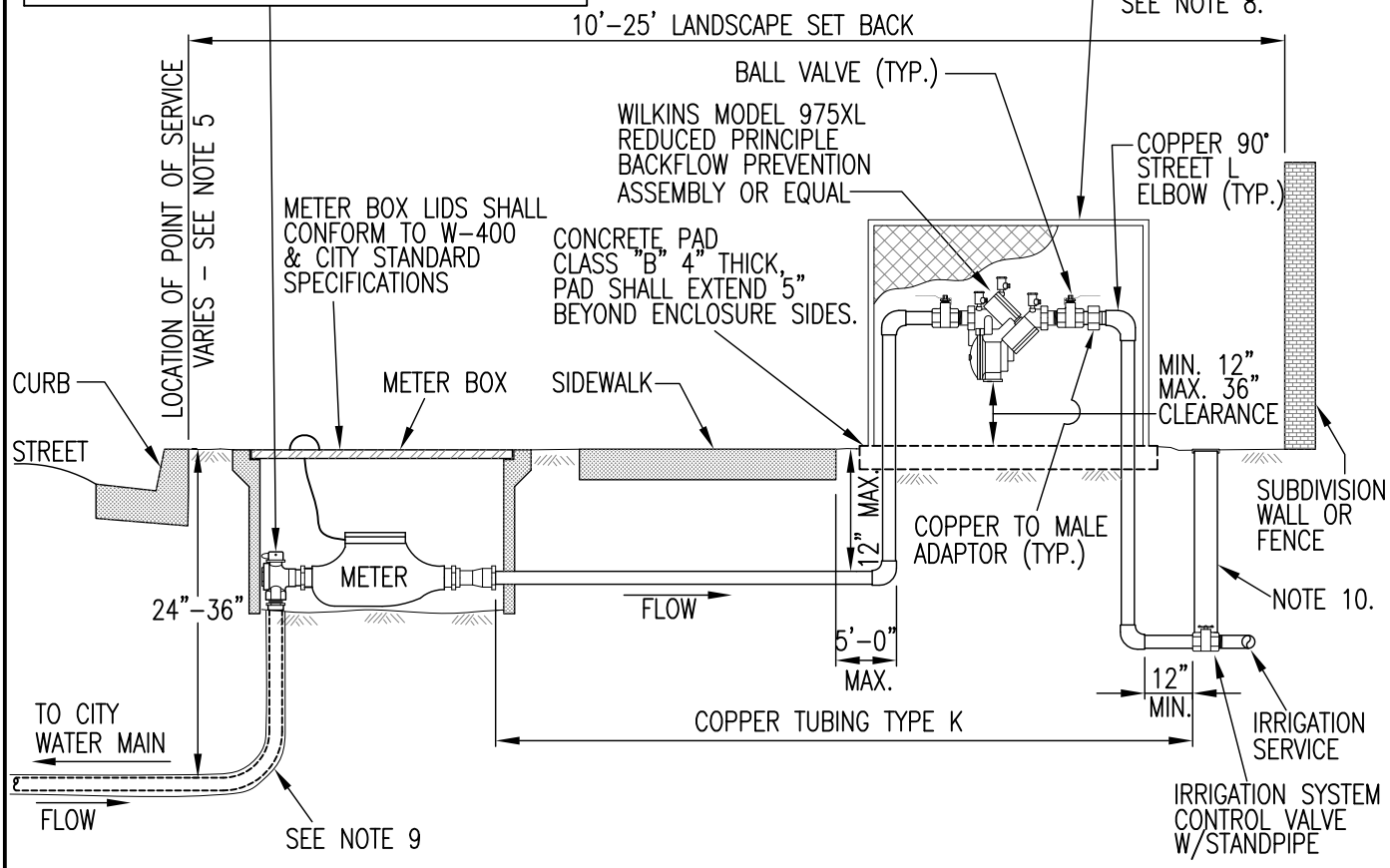

1. INSTALLATION SHALL BE IN ACCORDANCE WITH THE CURRENT CROSS CONNECTION CONTROL POLICY.
2. BACKFLOW ASSEMBLIES MUST BE TESTED BY A COUNTY OF SACRAMENTO CERTIFIED BACKFLOW ASSEMBLY TESTER AT TIME OF CONNECTION TO THE CITY WATER SERVICE.
3. METER IDENTIFICATION TAG NUMBER REQUIRED ON ALL BACKFLOW ASSEMBLY TEST REPORT FORMS.
4. IRRIGATION SYSTEM MAINTENANCE CONTROL VALVE REQUIRED.
5. WATER SERVICES WILL BE TERMINATED AT ONCE IF THE BACKFLOW ASSEMBLY HAS NOT BEEN TESTED PRIOR TO BEING PLACED IN SERVICE.
6. POINT OF SERVICE FOR MEDIAN IRRIGATION SYSTEMS IS THE BACK OF CURB IN THE MEDIAN AT THE DOWN STREAM SIDE OF THE WATER METER:
   A. BACK OF CURB FOR ALL CITY STREETS WITH PLANTER STRIPS AT THE DOWN STREAM SIDE OF THE WATER METER.
   B. BACK OF SIDEWALK FOR ALL STREETS WITH SIDEWALK CONTIGUOUS WITH CURB AND GUTTER AT THE DOWN STREAM SIDE OF THE WATER METER.
   C. WHERE THE POINT OF SERVICE IS UNCLEAR THE LOCATION SHALL BE DETERMINED BY THE CROSS CONNECTION CONTROL PROGRAM SPECIALIST.
7. FREEZE BAGS ARE REQUIRED ON ALL CITY MAINTAINED ASSEMBLIES.
8. CONCRETE PAD AND PROTECTIVE ENCLOSURE REQUIRED FOR ALL CITY MAINTAINED ASSEMBLIES. ENCLOSURE SHALL BE PLACER WATERWORKS PW/E1AW-M (W18"xL40"xH30") OR EQUAL. FINISH SHALL BE POWDER COATED HUNTER GREEN.
9. 6 MIL POLYETHYLENE WRAP WITH 10 MIL TAPE IS REQURIED FOR ALL UNDERGROUND COPPER TUBING.
10. PLACE BLOCKS UNDER STAND PIPE SO SUPPORTED CLEAR OF HORIZ PIPE. STAND PIPE TO BE 8" SDR 35 WITH 910 CARSON VALVE BOX GREY IN COLOR WITH (WATER) LETTERING ON THE LID, OR APPROVED EQUAL.

2-INCH AND SMALLER METERED IRRIGATION WATER SERVICES WITH REDUCED PRESSURE PRINCIPLE BACKFLOW PREVENTION ASSEMBLY IN A LANDSCAPE CORRIDOR OWNED BY CITY

REV.	DATE	DESCRIPTION
△		
△		
△		

CITY OF SACRAMENTO **DEPARTMENT OF UTILITIES**	2-INCH & SMALLER BACKFLOW ASSEMBLY IN LANDSCAPED SET BACK OWNED BY CITY	APPR'D BY: _____ NO SCALE DATE: SEPT 6, 2017 DWG. NO. **W-604**

R:\Utilstds_New_Std_Details\Water_Utilities\W-604

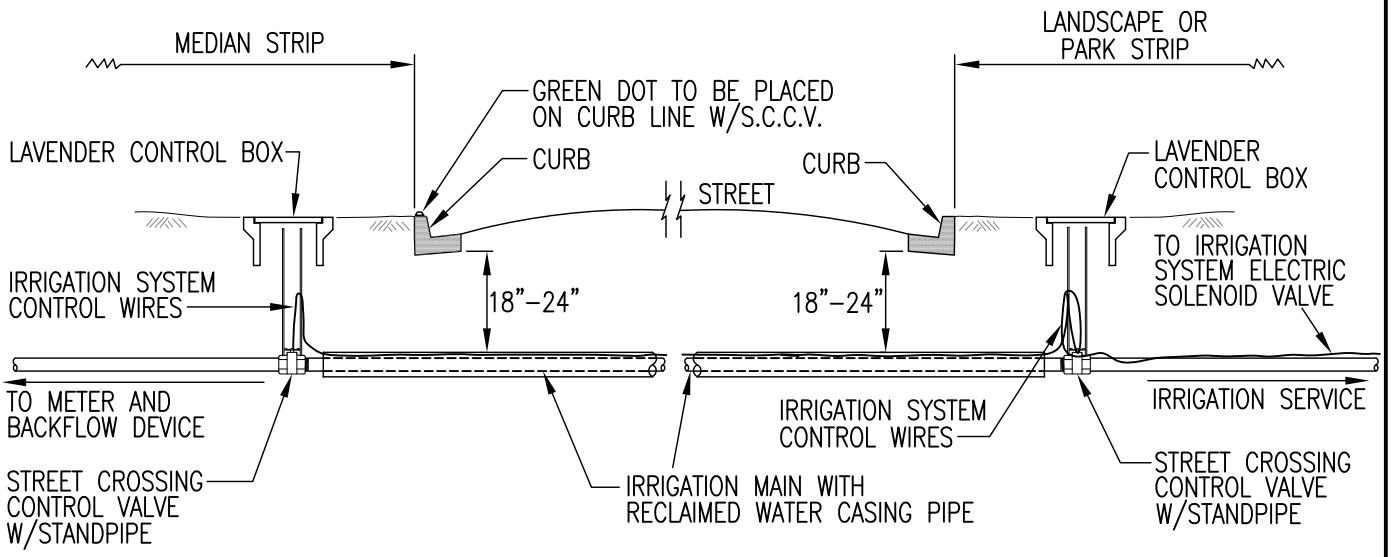

NOTES:

1. INSTALLATION SHALL BE IN ACCORDANCE WITH THE CURRENT CROSS CONNECTION CONTROL POLICY.
2. STREET CROSSING IRRIGATION CONTROL VALVES REQUIRED AT ALL STREET CROSSINGS.
3. IRRIGATION SYSTEM CONTROL VALVE WIRES REQUIRED.
4. CASING SHALL BE RECLAIMED WATER PIPING (PIPING COLOR IS LAVENDER)
5. IRRIGATION CONTROL VALVE ACCESS BOX SHALL BE LAVENDER IN COLOR.
6. 6" PVC SDR–35 STANDPIPE PER W–305 MAY BE REQUIRED ON IRRIGATION SYSTEM CONTROL VALVES DEPENDING ON DEPTH OF MAIN.
7. DEPTH OF IRRIGATION CROSSING PIPE SHALL BE A MINIMUM OF 18" AND MAXIMUM OF 24".

REV.	DATE	DESCRIPTION
△		
△		
△		

CITY OF SACRAMENTO **DEPARTMENT OF UTILITIES**	IRRIGATION SYSTEMS STREET CROSSINGS	APPR'D BY: Mike O. Booth NO SCALE DATE: MAY 2007 DWG. NO. **W–605**

R:\Utilstds_New_Std_Details\Water_Utilities\W-605

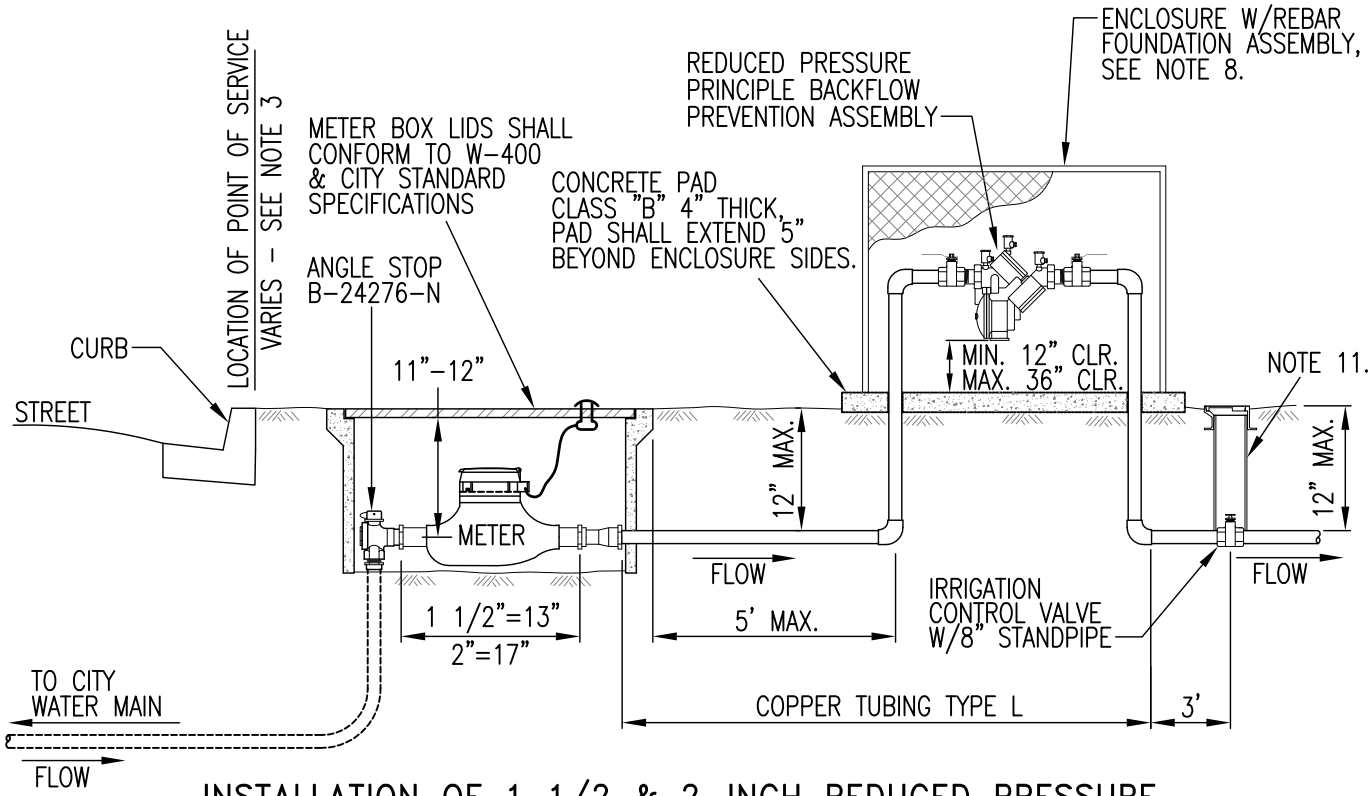

INSTALLATION OF 1 1/2 & 2-INCH REDUCED PRESSURE PRINCIPLE BACKFLOW PREVENTION ASSEMBLY /WATER METER ON ALL CITY IRRIGATION SYSTEMS OWNED BY THE CITY.

NOTES:

1. INSTALLATION AND TESTING SHALL BE IN ACCORDANCE WITH THE CURRENT CROSS CONNECTION CONTROL POLICY.
2. REDUCED PRESSURE BACKFLOW PREVENTION ASSEMBLIES SHALL BE CONNECTED TO CITY WATER AND TESTED PRIOR TO BEING PLACED INTO SERVICE.
3. POINT OF SERVICE:
   A. POINT OF SERVICE IS THE BACK OF CURB FOR ALL CITY STREETS WITH PLANTER STRIPS.
   B. POINT OF SERVICE IS THE BACK OF SIDEWALK FOR STREETS WITH SIDEWALK CONTIGUOUS WITH CURB AND GUTTER.
   C. POINT OF SERVICE IS THE RIGHT-OF-WAY LINE ON ALL ALLEYS AND UNIMPROVED STREETS.
   D. WHERE THE POINT OF SERVICE IS UNCLEAR THE LOCATION SHALL BE DETERMINED BY THE CROSS CONNECTION CONTROL SPECIALIST.
4. LISTS OF APPROVED BACKFLOW PREVENTION ASSEMBLIES AND CERTIFIED BACKFLOW PREVENTION ASSEMBLY TESTERS ARE AVAILABLE AT THE DEPARTMENT OF UTILITIES CUSTOMER SERVICE COUNTER LOCATED AT 1395 35TH AVE.
5. THE BACKFLOW PREVENTION ASSEMBLIES SHALL BE INSTALLED ABOVE GROUND, IN A HORIZONTAL AND LEVEL POSITION. THE ASSEMBLY SHALL BE LOCATED ON THE CUSTOMER'S SIDE AND NO FURTHER THAN FIVE (5) FEET FROM THE POINT OF SERVICE OR THE METER.
6. OUTLETS, TAPS, TEES, OR CONNECTIONS BETWEEN THE WATER MAIN AND BACKFLOW PREVENTER ARE NOT ALLOWED.
7. FREEZE BAGS ARE REQUIRED ON ALL CITY MAINTAINED ASSEMBLIES.
8. CONCRETE PAD AND PROTECTIVE ENCLOSURE REQUIRED FOR ALL CITY MAINTAINED ASSEMBLIES. ENCLOSURE SHALL BE PLACER WATERWORKS PW/E1AW-M (W18"xL40"xH30") OR EQUAL. FINISH SHALL BE POWDER COATED HUNTER GREEN.
9. IF PROTECTIVE ENCLOSURE IS REQUIRED, DEPARTMENT OF UTILITIES LOCK(S) SHALL BE INSTALLED.
10. 6 MIL POLYETHYLENE WRAP WITH 10 MIL TAPE IS REQUIRED FOR ALL UNDERGROUND COPPER TUBING.
11. PLACE BLOCKS UNDER STAND PIPE SO SUPPORTED CLEAR OF HORIZ PIPE. STAND PIPE TO BE 8" SDR 35 WITH 910 CARSON VALVE BOX GREY IN COLOR WITH (WATER) LETTERING ON THE LID, OR APPROVED EQUAL.

REV.	DATE	DESCRIPTION
△		
△		
△		

R:\Utilstds_New_Std_Details\Water_Utilities\W-606

CITY OF SACRAMENTO
DEPARTMENT OF UTILITIES

2-INCH & SMALLER RP ASSEMBLY W/METER ON ALL CITY IRRIGATION SYSTEMS

APPR'D BY: _____ NO SCALE

DATE: SEPT 6, 2017 DWG. NO. **W-606**

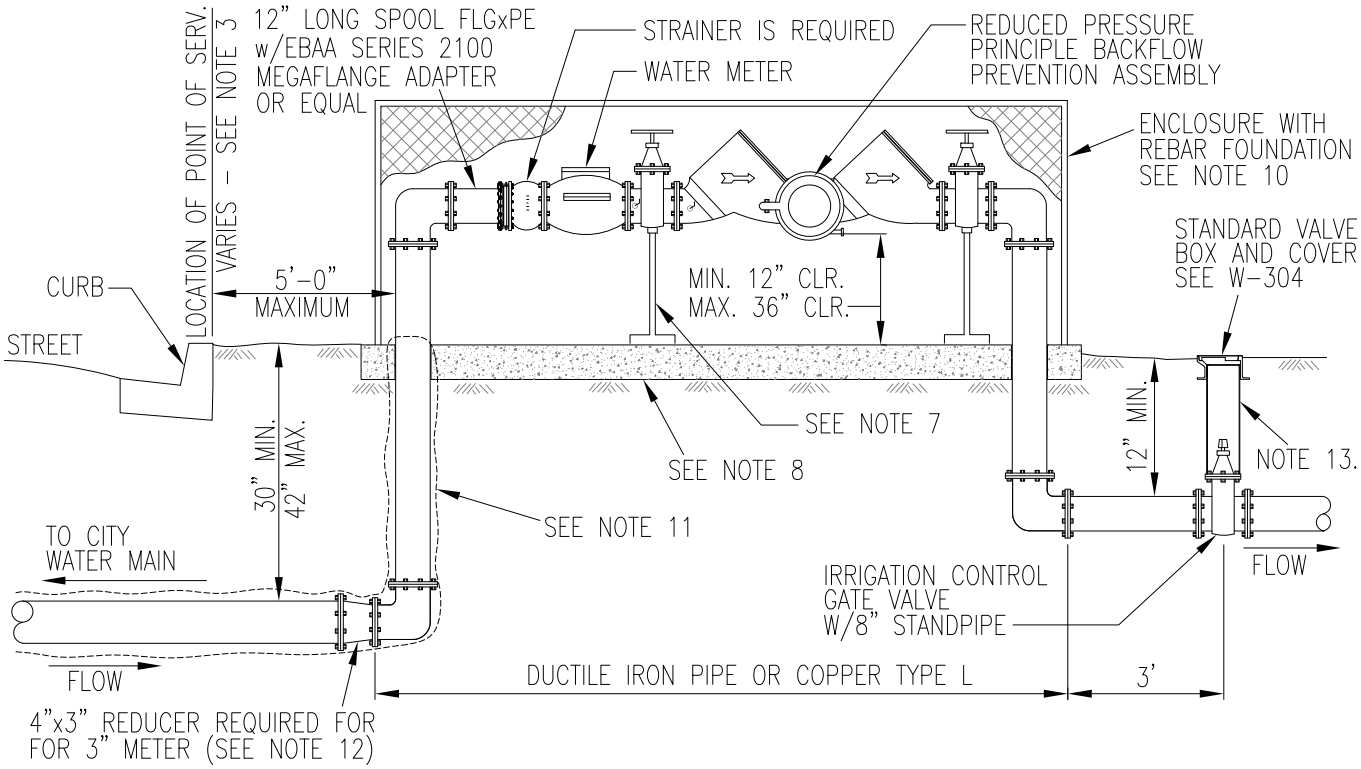

INSTALLATION OF 3-INCH AND LARGER REDUCED PRESSURE BACKFLOW PREVENTION ASSEMBLY WITH WATER METER ON ALL CITY IRRIGATION SYSTEMS

NOTES:

1. INSTALLATION AND TESTING SHALL BE IN ACCORDANCE WITH THE CURRENT CROSS CONNECTION CONTROL POLICY.
2. REDUCED PRESSURE BACKFLOW PREVENTION ASSEMBLIES SHALL BE CONNECTED TO CITY WATER AND TESTED PRIOR TO BEING PLACED INTO SERVICE.
3. POINT OF SERVICE:
   A. POINT OF SERVICE IS THE BACK OF CURB FOR ALL CITY STREETS WITH PLANTER STRIPS.
   B. POINT OF SERVICE IS THE BACK OF SIDEWALK FOR STREETS WITH SIDEWALK CONTIGUOUS WITH CURB AND GUTTER.
   C. POINT OF SERVICE IS THE RIGHT-OF-WAY LINE ON ALL ALLEYS AND UNIMPROVED STREETS.
   D. WHERE THE POINT OF SERVICE IS UNCLEAR THE LOCATION SHALL BE DETERMINED BY THE CROSS CONNECTION CONTROL SPECIALIST.
4. LISTS OF APPROVED BACKFLOW PREVENTION ASSEMBLIES AND CERTIFIED BACKFLOW PREVENTION ASSEMBLY TESTERS ARE AVAILABLE AT THE DEPARTMENT OF UTILITIES CUSTOMER SERVICE COUNTER LOCATED AT 1395 35TH AVENUE.
5. THE BACKFLOW PREVENTION ASSEMBLIES SHALL BE INSTALLED ABOVE GROUND, IN A HORIZONTAL AND LEVEL POSITION. THE ASSEMBLY SHALL BE LOCATED ON THE CUSTOMER'S SIDE AND NO FURTHER THAN FIVE (5) FEET FROM THE POINT OF SERVICE OR THE METER.
6. OUTLETS, TAPS, TEES, OR CONNECTIONS BETWEEN THE WATER MAIN AND BACKFLOW PREVENTER ARE NOT ALLOWED.
7. SUPPORTS ARE REQUIRED FOR ASSEMBLIES 3-INCH AND LARGER.
8. CONCRETE CLASS "B" 4" THICK. PAD SHALL EXTEND 12" BEYOND ENCLOSURE SIDES.
9. FREEZE BAGS ARE REQUIRED FOR CITY OWNED & MAINTAINED ASSEMBLIES.
10. PROTECTIVE ENCLOSURE IS REQUIRED, FOR CITY OWNED & MAINTAINED ASSEMBLIES. ENCLOSURES FOR ASSEMBLIES 4" AND SMALLER SHALL BE PLACER WATERWORKS PW/E2AW-M (W24"xL72"xH48") OR EQUAL. FOR ASSEMBLIES 6" AND LARGER THE ENCLOSURE SHALL BE PW/E2AW-L (W30"xL84"xH60") OR EQUAL. ALL ENCLOSURES SHALL BE POWDER COATED HUNTER GREEN.
11. 6 MIL POLYETHYLENE WRAP WITH 10 MIL TAPE IS REQUIRED FOR ALL UNDERGROUND COPPER TUBING AND DUCTILE IRON PIPE.
12. 3" ON-SITE WATER SERVICE REQUIRES A 4" TAP, 4"x3" REDUCER, 3" METER AND 3" BACKFLOW ASSEMBLY. 4" AND LARGER SERVICES REQUIRES TAP SIZE EQUIVALENT TO METER SIZE.
13. PLACE BLOCKS UNDER STAND PIPE SO SUPPORTED CLEAR OF HORIZ PIPE. STAND PIPE TO BE 8" SDR 35 PER W-304
14. FOR METER/STRAINER LAY LENGTH CONTACT METER SHOP SUPV VIA CITY OPERATOR.

REV.	DATE	DESCRIPTION
△		
△		
△		

CITY OF SACRAMENTO DEPARTMENT OF UTILITIES	3-INCH & LARGER RP DEVICE W/METER ON ALL CITY IRRIGATION SYSTEMS	APPR'D BY: _____ NO SCALE DATE: SEPT 9, 2017 DWG. NO. W-607

R:\Utilstds_New_Std_Details\Water_Utilities\W-607

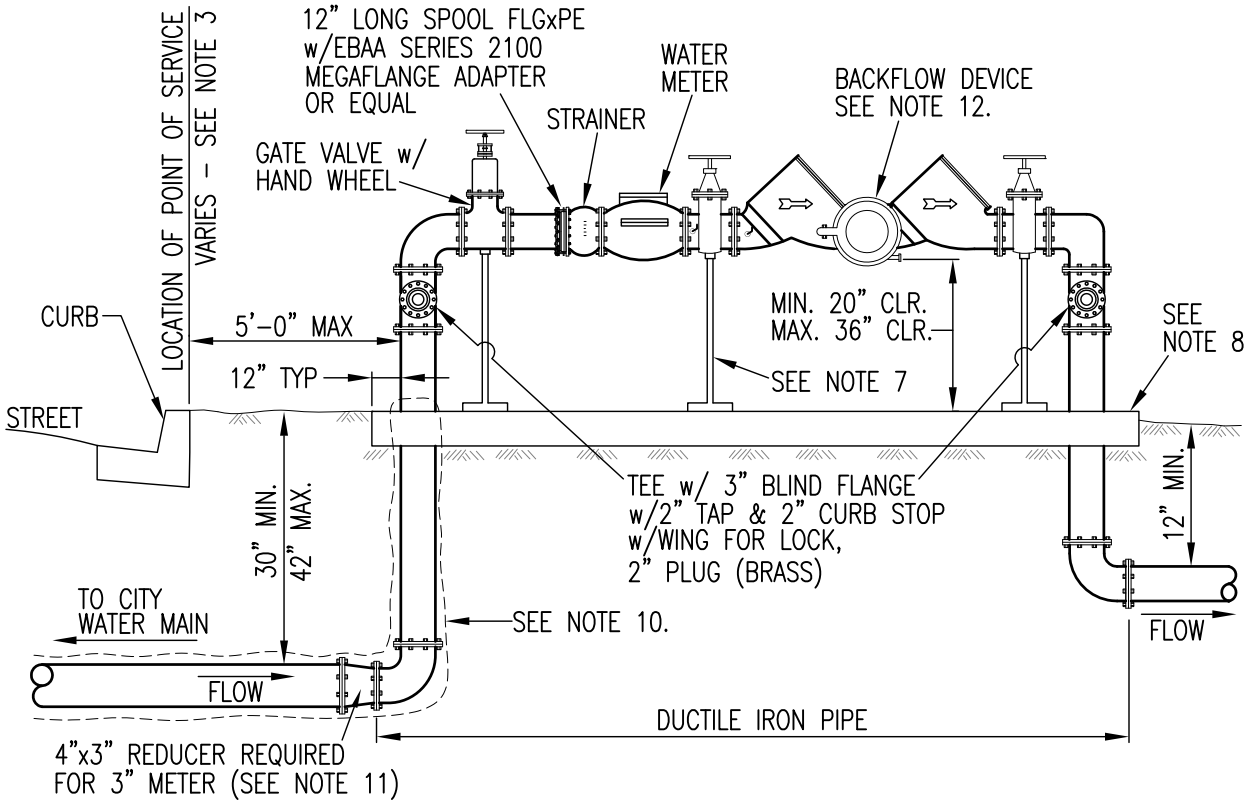

INSTALLATION OF 3-INCH AND LARGER METERED WATER SERVICE WITH BACKFLOW ASSEMBLY

NOTES:

1. INSTALLATION AND TESTING SHALL BE IN ACCORDANCE WITH THE CURRENT CROSS CONNECTION CONTROL POLICY.
2. REDUCED PRESSURE BACKFLOW PREVENTION ASSEMBLIES SHALL BE CONNECTED TO CITY WATER AND TESTED PRIOR TO BEING PLACED INTO SERVICE.
3. POINT OF SERVICE:
   A. POINT OF SERVICE IS THE BACK OF CURB FOR ALL CITY STREETS WITH PLANTER STRIPS.
   B. POINT OF SERVICE IS THE BACK OF SIDEWALK FOR STREETS WITH SIDEWALK CONTIGUOUS WITH CURB AND GUTTER.
   C. POINT OF SERVICE IS THE RIGHT-OF-WAY LINE ON ALL ALLEYS AND UNIMPROVED STREETS.
   D. WHERE THE POINT OF SERVICE IS UNCLEAR THE LOCATION SHALL BE DETERMINED BY THE CROSS CONNECTION CONTROL SPECIALIST.
4. LISTS OF APPROVED BACKFLOW PREVENTION ASSEMBLIES AND CERTIFIED BACKFLOW PREVENTION ASSEMBLY TESTERS ARE AVAILABLE AT THE DEPARTMENT OF UTILITIES CUSTOMER SERVICE COUNTER LOCATED AT 1395 35TH AVE.
5. THE BACKFLOW PREVENTION ASSEMBLIES SHALL BE INSTALLED ABOVE GROUND, IN A HORIZONTAL AND LEVEL POSITION. THE ASSEMBLY SHALL BE LOCATED ON THE CUSTOMER'S SIDE AND NO FURTHER THAN FIVE (5) FEET FROM THE POINT OF SERVICE OR THE METER.
6. OUTLETS, TAPS, TEES, OR CONNECTIONS BETWEEN THE WATER MAIN AND BACKFLOW PREVENTER ARE NOT ALLOWED. UNLESS SHOWN ON THE DETAIL.
7. SUPPORTS ARE REQUIRED.
8. CONCRETE PAD IS REQUIRED. WIDTH 3'(MIN), LENGTH 12"(MIN) BEYOND EDGE OF PIPE, THICKNESS 4"(MIN)
9. FREEZE BAGS ARE RECOMMENDED FOR FREEZE PROTECTION.
10. 6 MIL POLYETHYLENE WRAP WITH 10 MIL TAPE IS REQUIRED FOR ALL UNDERGROUND COPPER TUBING AND DUCTILE IRON PIPE.
11. 3" ON-SITE WATER SERVICE REQUIRES A 4" TAP, 4"x3" REDUCER, 3" METER AND 3" BACKFLOW ASSEMBLY. 4" AND LARGER METERS REQUIRES TAP SIZE EQUIVALENT TO METER SIZE.
12. DETERMINATION OF THE TYPE OF BACKFLOW ASSEMBLY REQUIRED SHALL BE MADE BY THE COS, DOU's CROSS CONNECTION SPECIALIST.
13. PROTECTIVE ENCLOSURE IS REQUIRED, FOR CITY OWNED & MAINTAINED ASSEMBLIES. ENCLOSURES FOR ASSEMBLIES 4" AND SMALLER SHALL BE PLACER WATERWORKS PW/E2AW-M (W24"xL72"xH48") OR EQUAL. FOR ASSEMBLIES 6" AND LARGER THE ENCLOSURE SHALL BE PW/E2AW-L (W30"xL84"xH60") OR EQUAL. ALL ENCLOSURES SHALL BE POWDER COATED HUNTER GREEN.
14. FOR METER/STRAINER LAY LENGTH CONTACT METER SHOP SUPV CITY OPERATOR

REV.	DATE	DESCRIPTION
△		
△		
△		

R:\Utilstds_New_Std_Details\Water_Utilities\W-608

CITY OF SACRAMENTO
DEPARTMENT OF UTILITIES

INSTALLATION OF 3" & LARGER METERED WTR SERV w/ BF ASSEMBLY

APPR'D BY: _____ NO SCALE
DATE: SEPT 6, 2017 DWG. NO. **W-608**

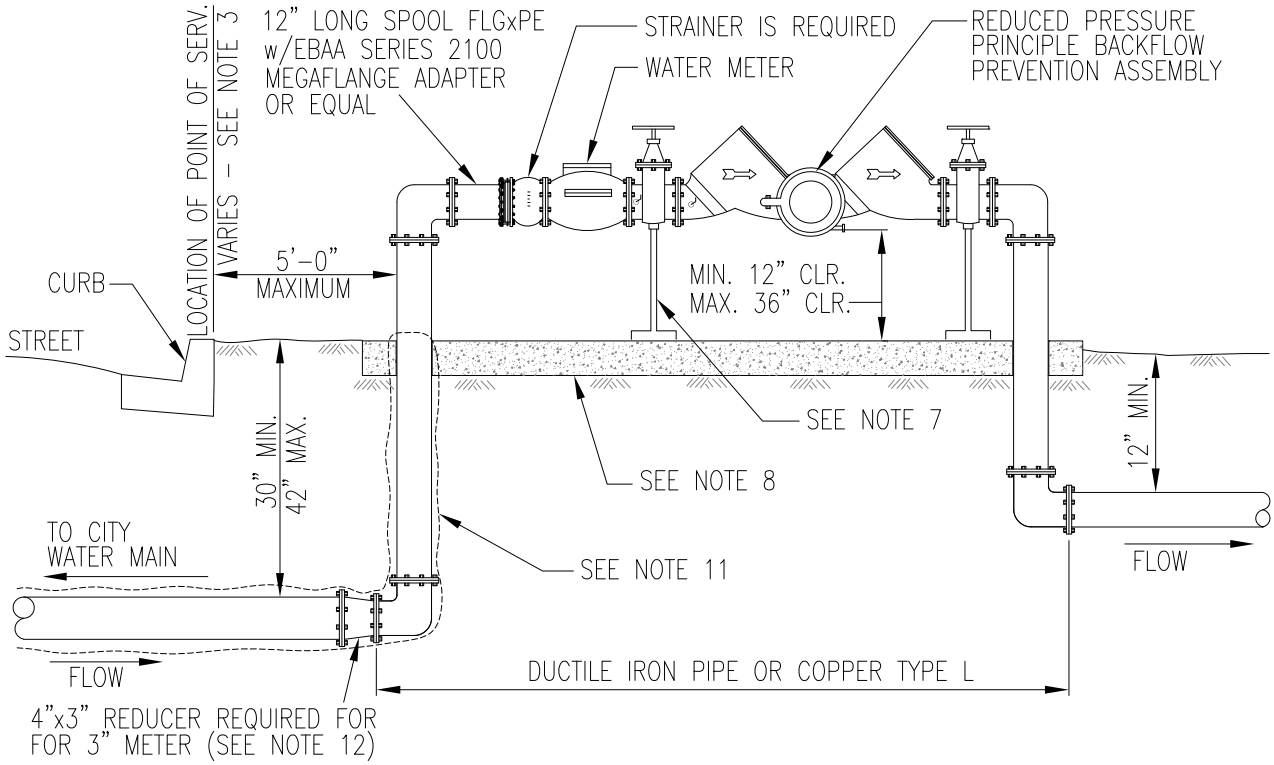

INSTALLATION OF 3-INCH AND LARGER REDUCED PRESSURE BACKFLOW PREVENTION ASSEMBLY WITH WATER METER ON NON CITY IRRIGATION AND LOOPED DOMESTIC SYSTEMS

NOTES:

1. INSTALLATION AND TESTING SHALL BE IN ACCORDANCE WITH THE CURRENT CROSS CONNECTION CONTROL POLICY.
2. REDUCED PRESSURE BACKFLOW PREVENTION ASSEMBLIES SHALL BE CONNECTED TO CITY WATER AND TESTED PRIOR TO BEING PLACED INTO SERVICE.
3. POINT OF SERVICE:
   A. POINT OF SERVICE IS THE BACK OF CURB FOR ALL CITY STREETS WITH PLANTER STRIPS.
   B. POINT OF SERVICE IS THE BACK OF SIDEWALK FOR STREETS WITH SIDEWALK CONTIGUOUS WITH CURB AND GUTTER.
   C. POINT OF SERVICE IS THE RIGHT-OF-WAY LINE ON ALL ALLEYS AND UNIMPROVED STREETS.
   D. WHERE THE POINT OF SERVICE IS UNCLEAR THE LOCATION SHALL BE DETERMINED BY THE CROSS CONNECTION CONTROL SPECIALIST.
4. LISTS OF APPROVED BACKFLOW PREVENTION ASSEMBLIES AND CERTIFIED BACKFLOW PREVENTION ASSEMBLY TESTERS ARE AVAILABLE AT THE DEPARTMENT OF UTILITIES CUSTOMER SERVICE COUNTER LOCATED AT 1395 35TH AVENUE.
5. THE BACKFLOW PREVENTION ASSEMBLIES SHALL BE INSTALLED ABOVE GROUND, IN A HORIZONTAL AND LEVEL POSITION. THE ASSEMBLY SHALL BE LOCATED ON THE CUSTOMER'S SIDE AND NO FURTHER THAN FIVE (5) FEET FROM THE POINT OF SERVICE OR THE METER.
6. OUTLETS, TAPS, TEES, OR CONNECTIONS BETWEEN THE WATER MAIN AND BACKFLOW PREVENTER ARE NOT ALLOWED.
7. SUPPORTS ARE REQUIRED FOR ASSEMBLIES 3-INCH AND LARGER.
8. CONCRETE CLASS "B" 4" THICK. PAD SHALL EXTEND 12" BEYOND ENCLOSURE SIDES.
9. 6 MIL POLYETHYLENE WRAP WITH 10 MIL TAPE IS REQUIRED FOR ALL UNDERGROUND COPPER TUBING AND DUCTILE IRON PIPE.
10. 3" ON-SITE WATER SERVICE REQUIRES A 4" TAP, 4"x3" REDUCER, 3" METER AND 3" BACKFLOW ASSEMBLY. 4" AND LARGER SERVICES REQUIRES TAP SIZE EQUIVALENT TO METER SIZE.
11. FOR METER/STRAINER LAY LENGTH CONTACT METER SHOP SUPV VIA CITY OPERATOR.

REV.	DATE	DESCRIPTION
△		
△		
△		

R:\Utilstds_New_Std_Details\Water_Utilities\W-609

CITY OF SACRAMENTO DEPARTMENT OF UTILITIES	3-INCH & LARGER RP DEVICE W/METER ON NON CITY IRRIGATION & LOOPED DOMESTIC SYSTEM	APPR'D BY: _____ NO SCALE DATE: SEPT 19, 2017 DWG. NO. W-609

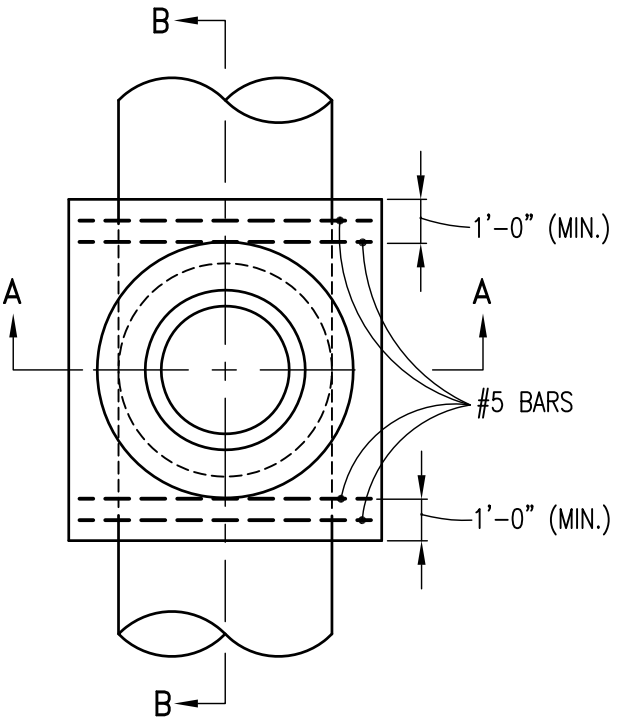

PLAN

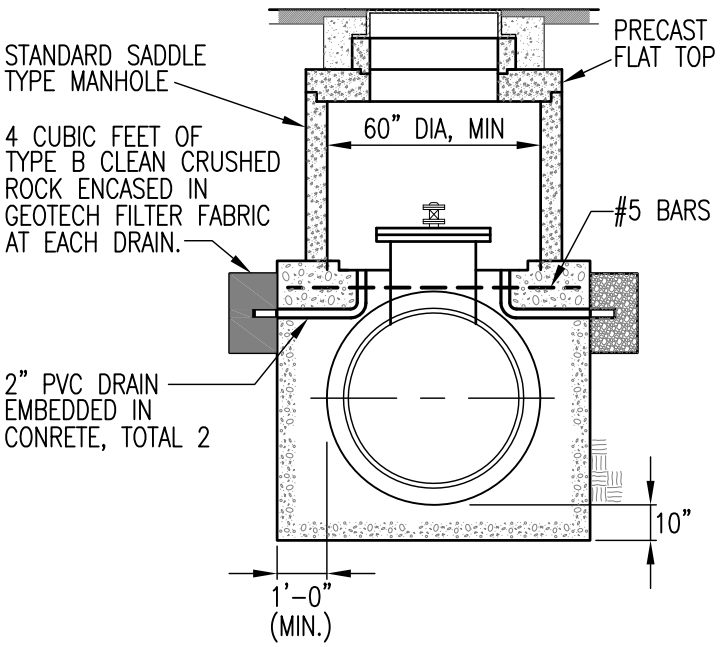

SECTION A-A

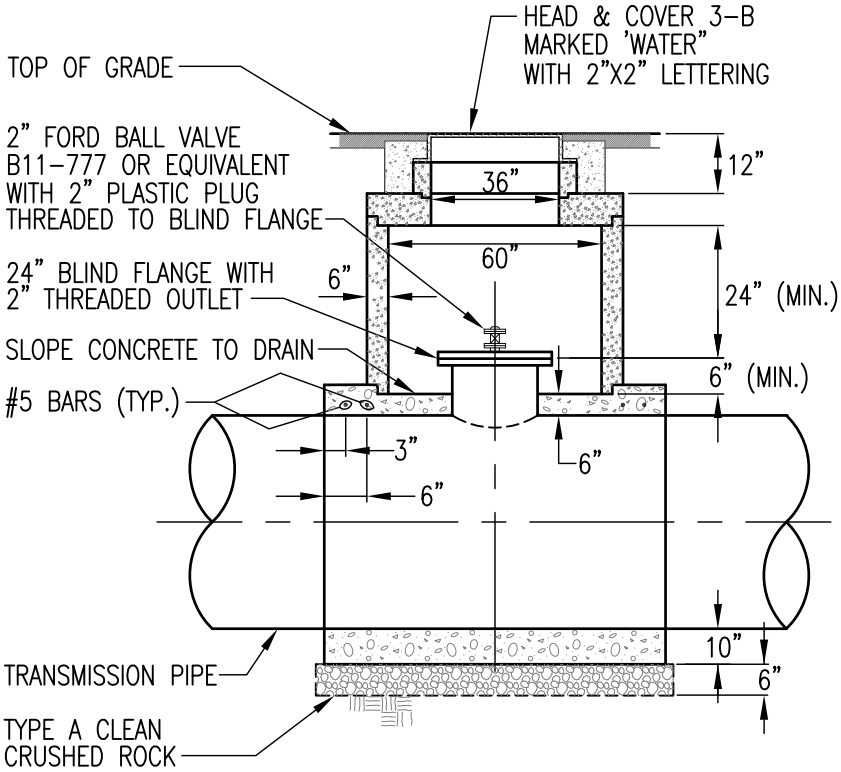

SECTION B-B

NOTE:

1. MANHOLE SHALL CONFORM TO SECTION 25

REV.	DATE	DESCRIPTION

CITY OF SACRAMENTO
DEPARTMENT OF UTILITIES

ACCESS MANHOLE DETAILS

APPR'D BY: Mike O. Booth NO SCALE

DATE: MAY 2007 DWG. NO. **W-702**

R:\Utilstds_New_Std_Details\Water_Utilities\W-702

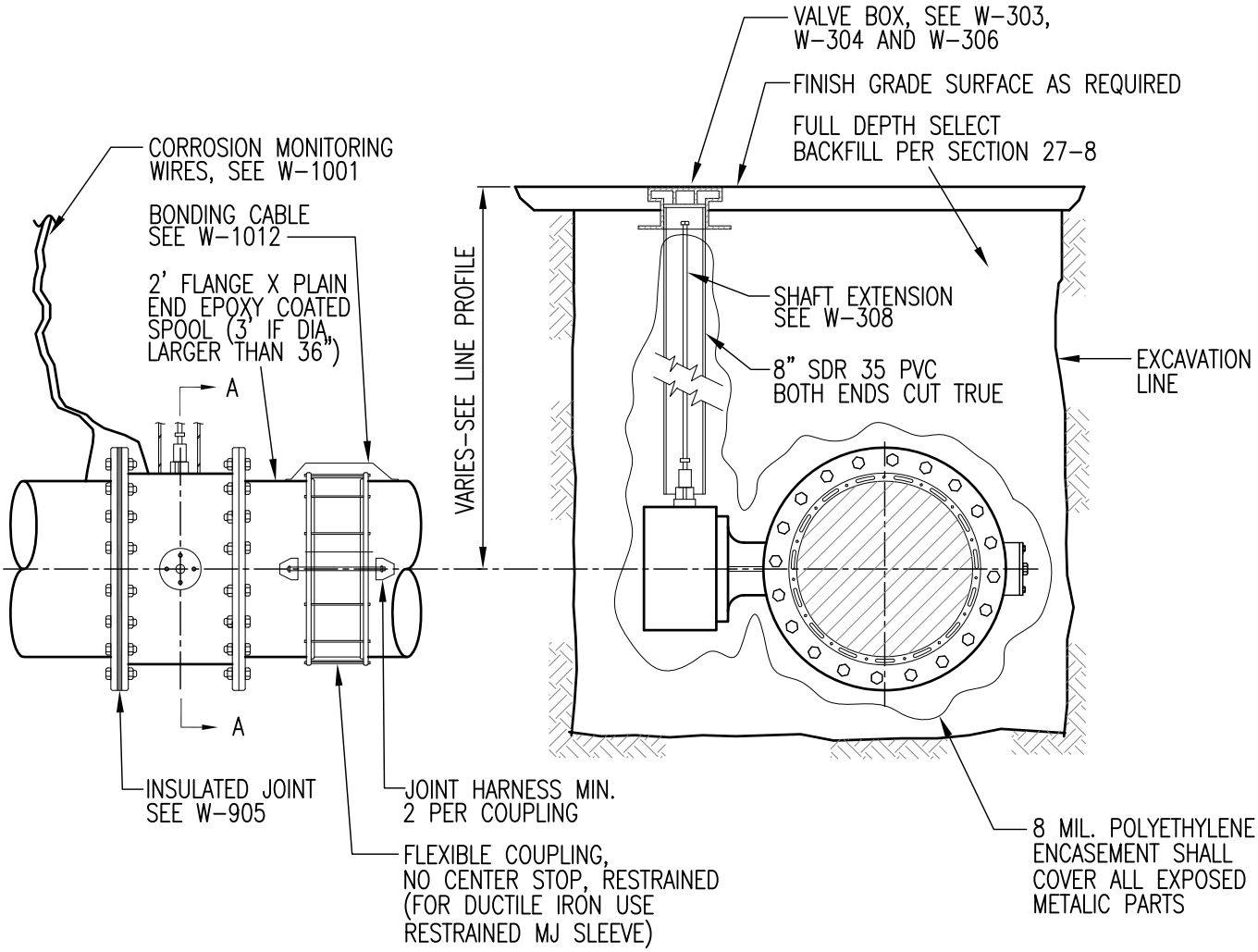

ELEVATION

SECTION A-A

NOTE:

1. SEE SECTION 10 FOR VALVE AND COUPLING COATINGS.
2. A ONE PIECE FULL FACED GASKET IS REQUIRED ON ALL FLANGED FITTINGS.

REV.	DATE	DESCRIPTION

CITY OF SACRAMENTO **DEPARTMENT OF UTILITIES**	BUTTERFLY VALVE STANDARD BURIED INSTALLATION DETAIL	APPR'D BY: _____ NO SCALE DATE: SEPT 6, 2017 DWG. NO. **W-801**

R:\Utilstds_New_Std_Details\Water_Utilities\W-801

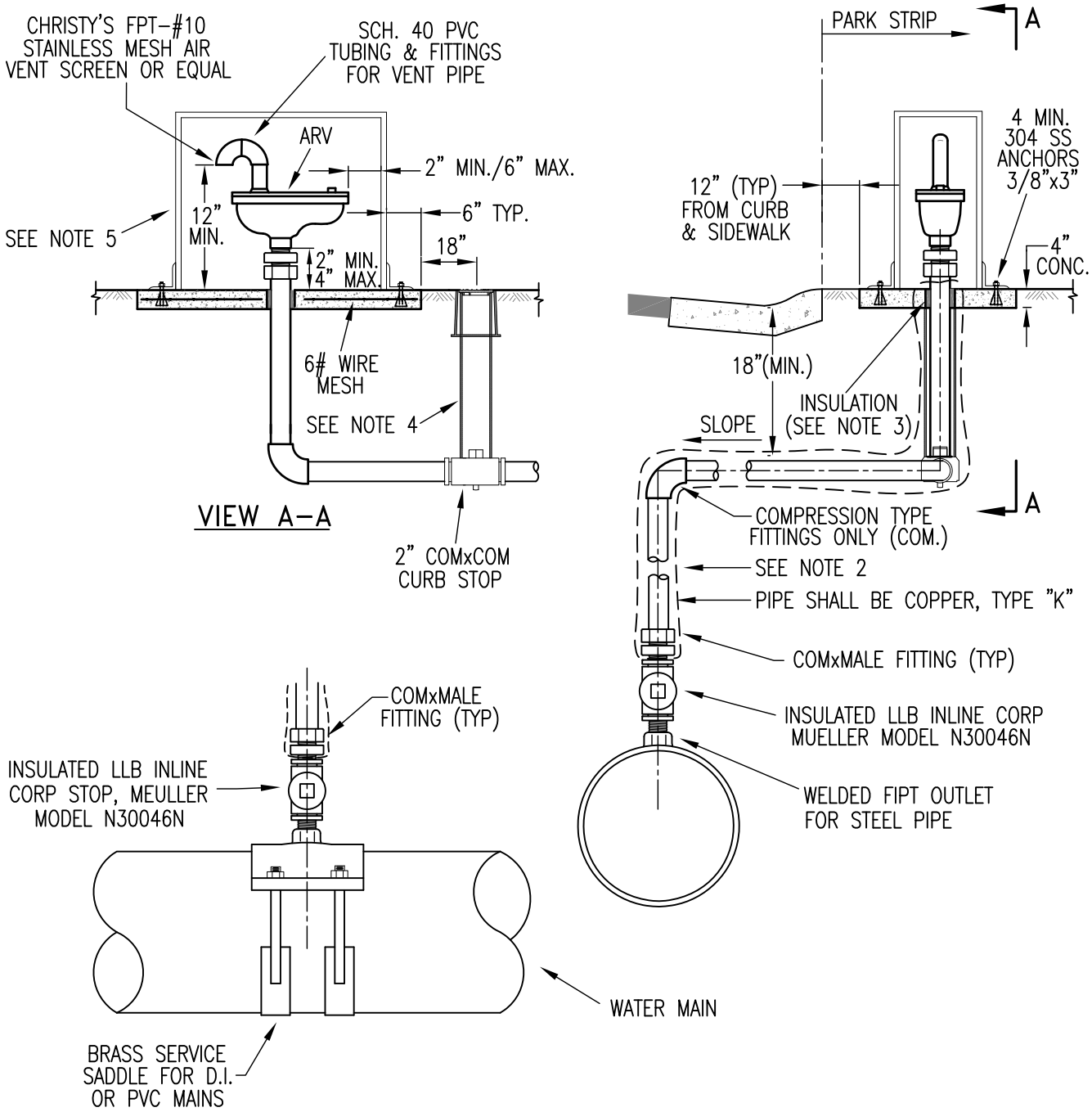

NOTES:

1. MAINTAIN A SLOPE UPWARD FROM CORP. STOP TO AIR VALVE (NO TRAPS).
2. 6 MIL POLYETHYLENE ENCASEMENT WITH 10 MIL TAPE IS REQUIRED FOR ALL UNDERGROUND COPPER TUBING
3. 3/32"x6" POLYETHYLENE FOAM WRAP REQUIRED, THREE WRAPS AROUND THE PIPE.
4. BLOCKS TO BE PLACED UNDER STAND PIPE. STAND PIPE TO BE 8" SDR 35 WITH 910 CARSON VALVE BOX GRAY IN COLOR WITH (WATER) LETTERING ON THE LID OR APPROVED EQUAL.
5. GUARDSHACK GS-1 OR APPROVED EQUAL.

REV.	DATE	DESCRIPTION
△		
△		
△		

CITY OF SACRAMENTO
DEPARTMENT OF UTILITIES

1 & 2 INCH AIR VACUUM AND AIR RELEASE VALVE ABOVEGROUND INSTALLATIONS WITHOUT FLOODSAFE

APPR'D BY: _____ NO SCALE
DATE: SEPT 6, 2017 DWG. NO. **W-802**

R:\Utilstds_New_Std_Details\Water_Utilities\W-802

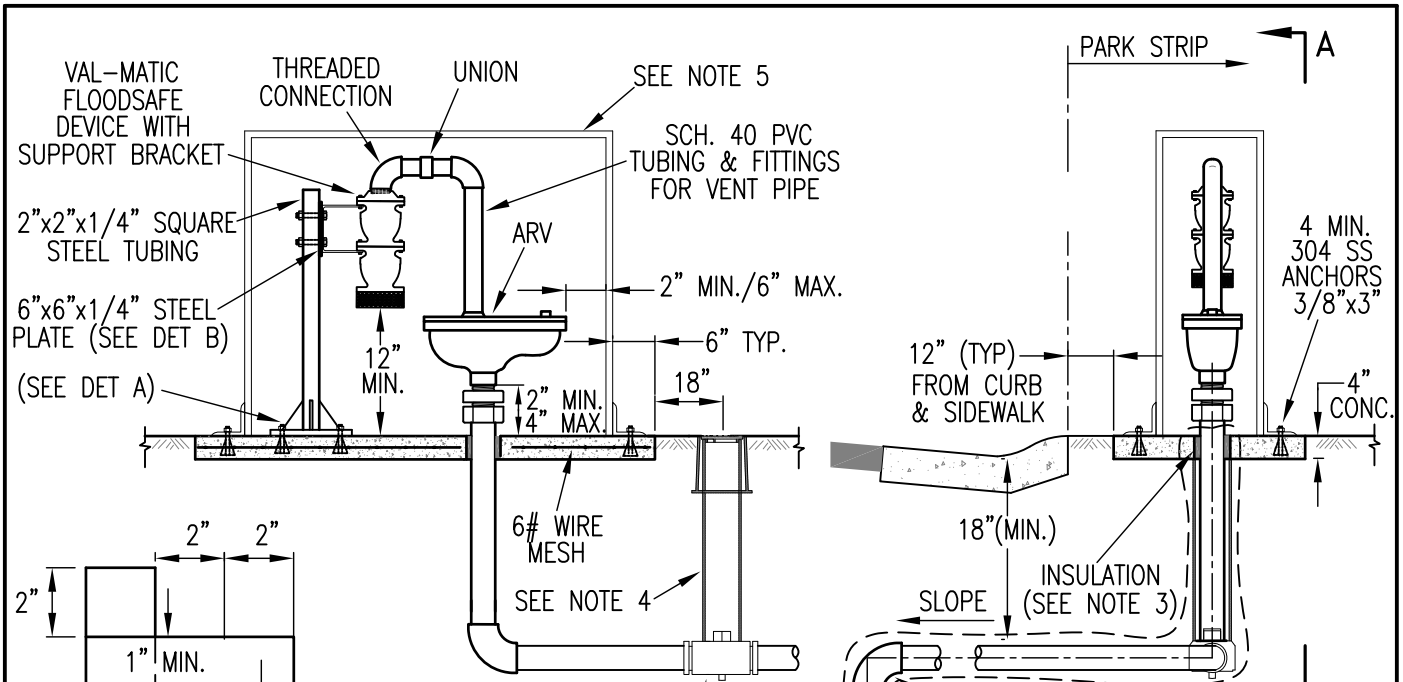

VIEW A-A

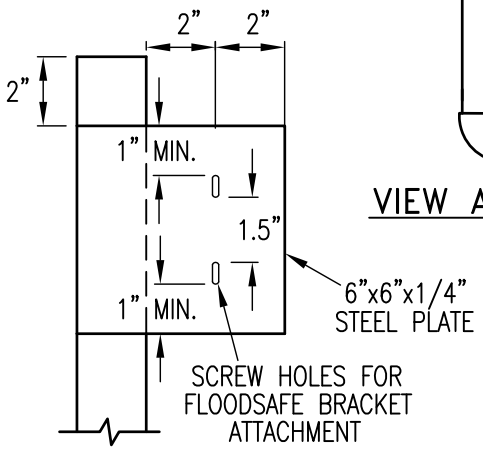

DETAIL B

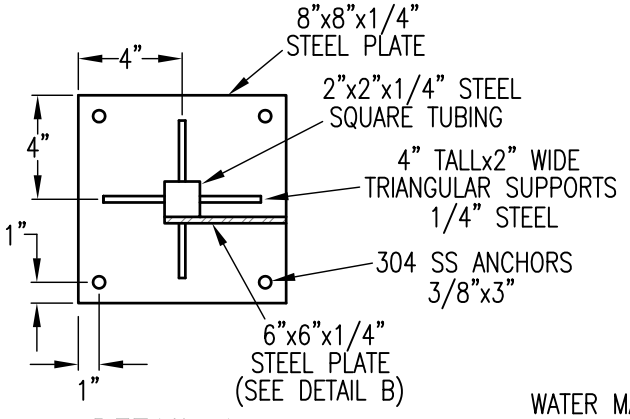

DETAIL A

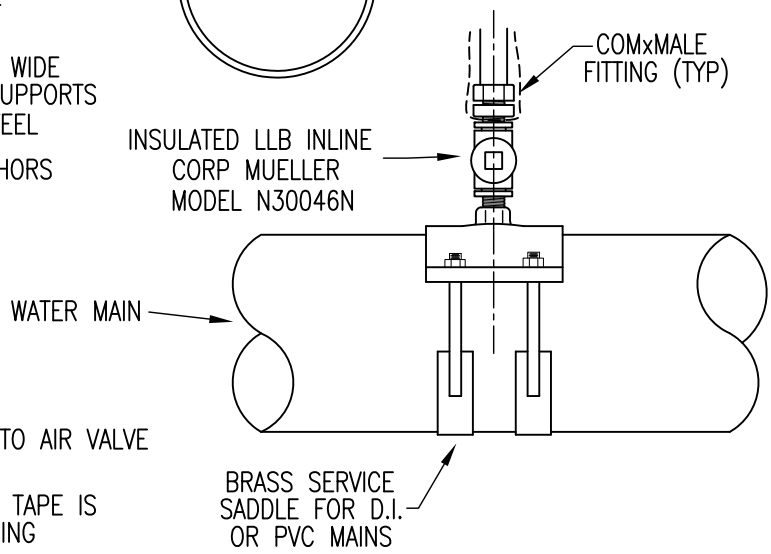

NOTES:

1. MAINTAIN A SLOPE UPWARD FROM CORP. STOP TO AIR VALVE (NO TRAPS).
2. 6 MIL POLYETHYLENE ENCASEMENT WITH 10 MIL TAPE IS REQUIRED FOR ALL UNDERGROUND COPPER TUBING
3. 3/32"x6" POLYETHYLENE FOAM WRAP REQUIRED, THREE WRAPS AROUND THE PIPE.
4. BLOCKS TO BE PLACED UNDER STAND PIPE. STAND PIPE TO BE 8" SDR 35 WITH 910 CARSON VALVE BOX GRAY IN COLOR WITH (WATER) LETTERING ON THE LID OR APPROVED EQUAL.
5. PLACER WATER WORKS SJARV-SF-21, GUARDSHACK GS-NP1, OR APPROVED EQUAL.

REV.	DATE	DESCRIPTION

CITY OF SACRAMENTO
DEPARTMENT OF UTILITIES

1 & 2 INCH AIR VACUUM AND AIR RELEASE VALVE ABOVEGROUND INSTALLATIONS WITH FLOODSAFE

APPR'D BY: _____ NO SCALE
DATE: SEPT 6, 2017 DWG. NO. **W-802A**

R:\Utilstds_New_Std_Details\Water_Utilities\W-802A

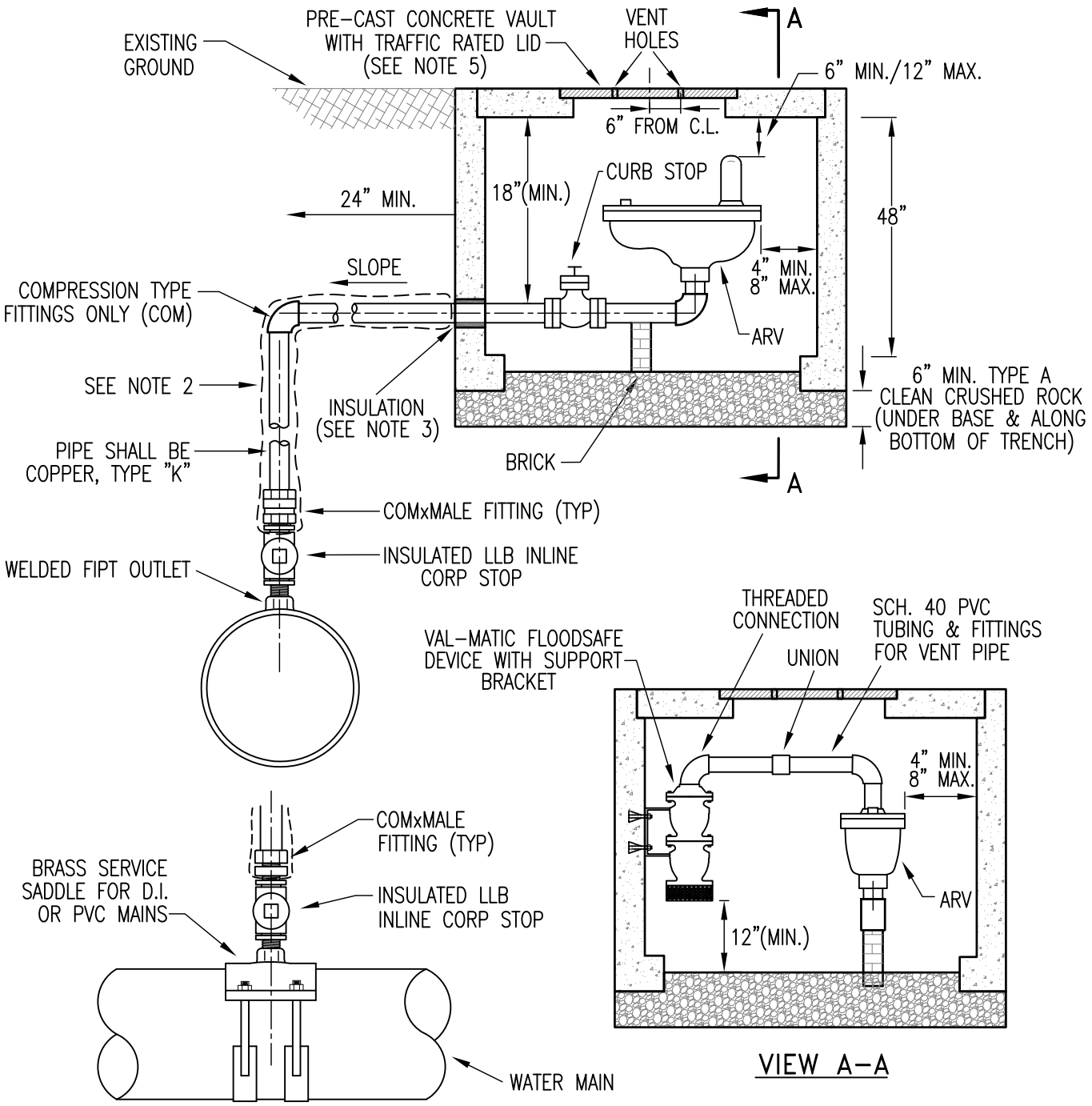

NOTES:

1. MAINTAIN A SLOPE UPWARD FROM CORP. STOP TO AIR VALVE. (NO TRAPS)
2. 6 MIL POLYETHYLENE ENCASEMENT WITH 10 MIL TAPE IS REQUIRED FOR ALL UNDERGROUND COPPER TUBING.
3. 3/32"x6" POLYETHYLENE FOAM WRAP REQUIRED THREE WRAPS AROUND THE PIPE.
4. PIPE AND FITTINGS BETWEEN WATER MAIN AND ARV SHALL BE COPPER AND BRASS ONLY.
5. VAULT SHALL BE JENSEN PRE-CAST DESIGN, OR APPROVED EQUAL. WHEN VAULT IS WITHIN VEHICULAR TRAFFICKED RIGHT-OF-WAY, LID SHALL BE A REMOVABLE TOP SLAB WITH A 36" DIAMETER RING & COVER (WITH A MIN. OF 4-1.5" DIAMETER EVENLY SPACED VENT HOLES) AND A DIAMOND PLATE SURFACE. WHEN VAULT IS WITHIN AREAS WITHOUT VEHICULAR TRAFFIC, LID SHALL BE TORSION SPRING ASSISTED DOORS WITH A SLIP RESISTANT TEXTURED SURFACE.
6. VAULT SHALL HAVE AN INTERIOR DEPTH OF 48", AN INTERIOR WIDTH OF 48", AND A MINIMUM LENGTH OF 48".

REV.	DATE	DESCRIPTION
△		
△		
△		

CITY OF SACRAMENTO
DEPARTMENT OF UTILITIES

1 & 2 INCH AIR VACUUM AND AIR RELEASE VALVE UNDERGROUND INSTALLATIONS (VAULT)

APPR'D BY: _____ NO SCALE
DATE: SEPT 6, 2017 DWG. NO. **W-802B**

R:\Utilstds_New_Std_Details\Water_Utilities\W-802B

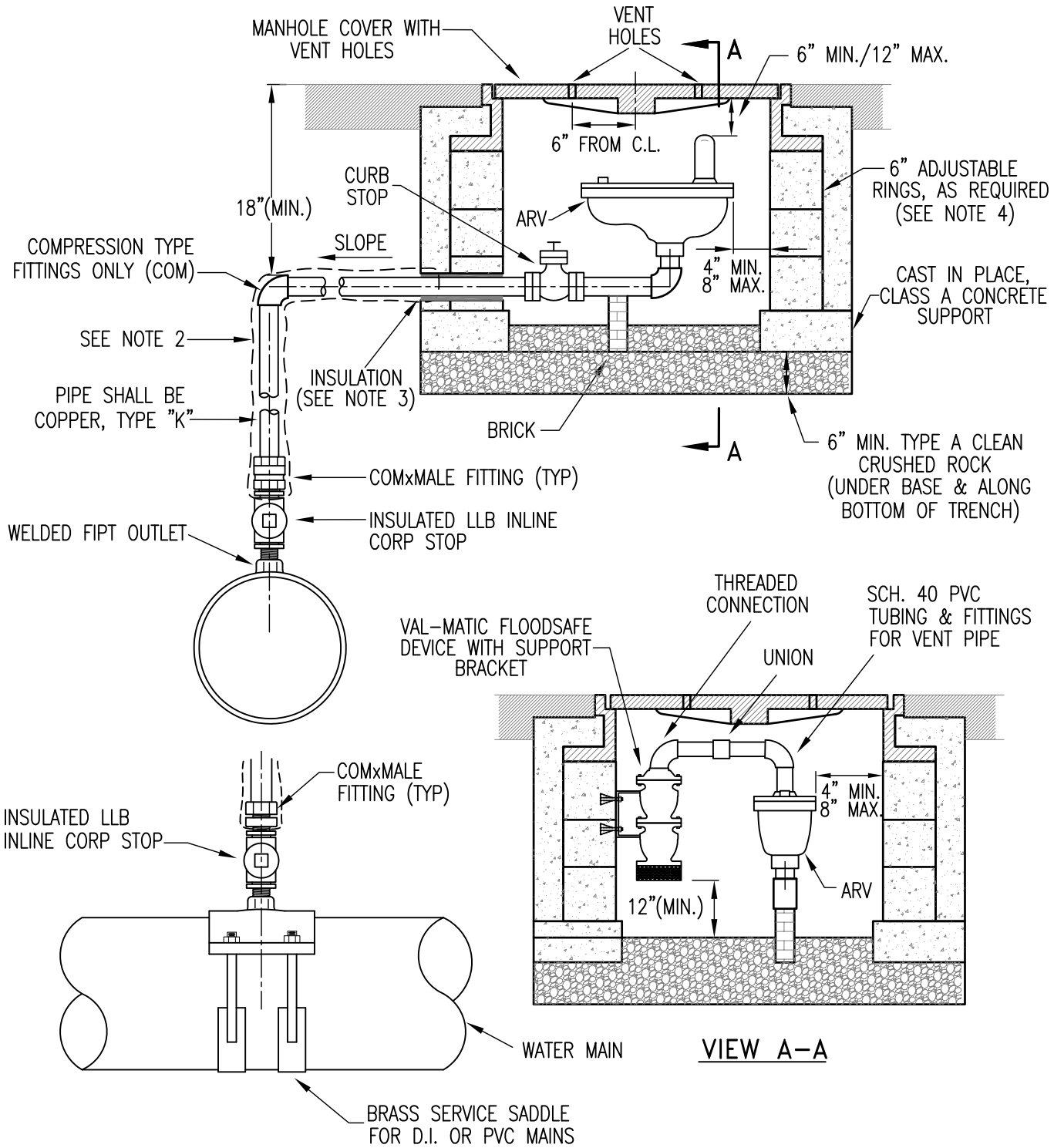

NOTES:

1. MAINTAIN A SLOPE UPWARD FROM CORP. STOP TO AIR VALVE. (NO TRAPS)
2. 6 MIL POLYETHYLENE ENCASEMENT WITH 10 MIL TAPE IS REQUIRED FOR ALL UNDERGROUND COPPER TUBING.
3. 3/32"x6" POLYETHYLENE FOAM WRAP REQUIRED THREE WRAPS AROUND THE PIPE.
4. SET GRADE RINGS AND HEAD & COVER IN CONCRETE PER SECTION 25.
5. PIPE AND FITTINGS BETWEEN WATER MAIN AND ARV SHALL BE COPPER AND BRASS ONLY.
6. MANHOLE SHALL HAVE A MINIMUM OF 4-1.5" DIAMETER EVENLY SPACED VENT HOLES, AND SHALL HAVE A DIAMOND FINISH ON THE COVER (IF WITHIN PEDESTRIAN AREAS, THE COVER SHALL HAVE A SAND FINISH).

REV.	DATE	DESCRIPTION
△		
△		
△		

CITY OF SACRAMENTO
DEPARTMENT OF UTILITIES

1 & 2 INCH AIR VACUUM AND AIR RELEASE VALVE UNDERGROUND INSTALLATIONS (MANHOLE)

APPR'D BY: _____ NO SCALE
DATE: SEPT 6, 2017 DWG. NO. **W-802C**

R:\Utilstds_New_Std_Details\Water_Utilities\W-802C

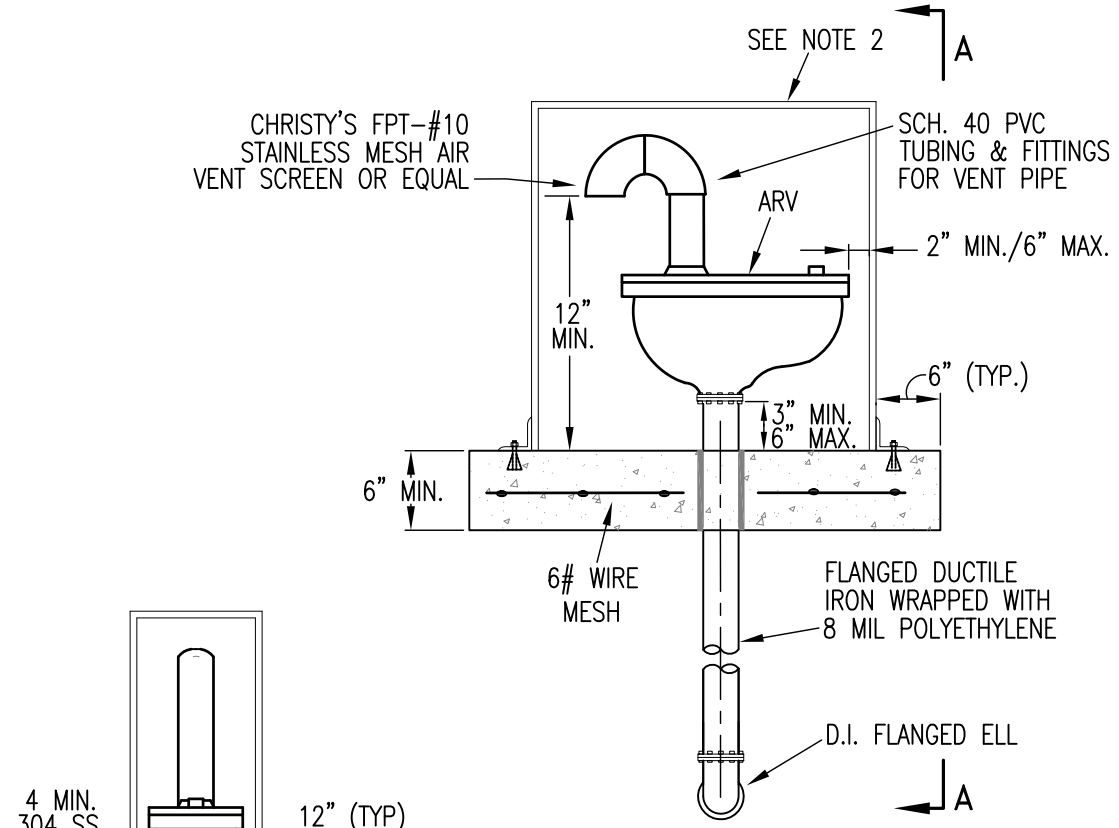

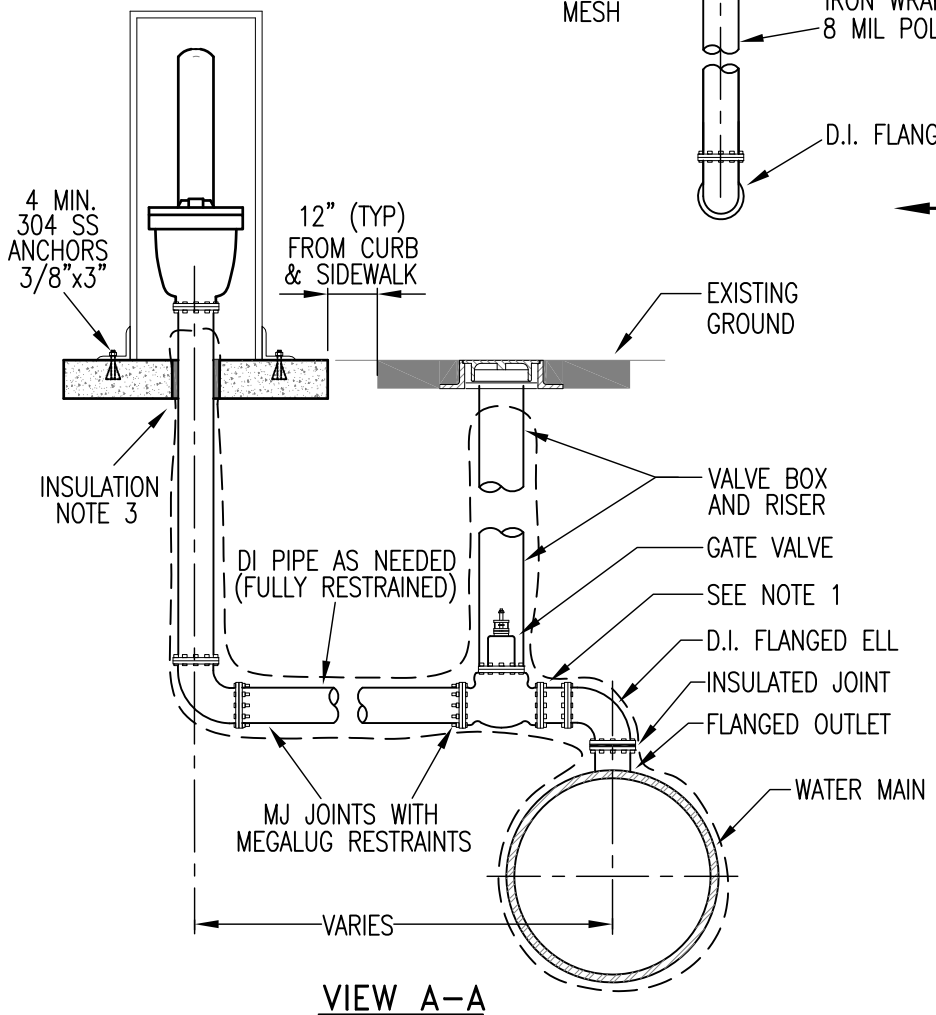

VIEW A-A

NOTE:

1. FOR D.I. WATER MAIN, INSULATED JOINT SHALL BE LOCATED AT THE GATE VALVE.
2. GUARDSHACK GS-M4, OR APPROVED EQUAL.
3. 3/32"x6" POLYETHYLENE FOAM WRAP REQUIRED, THREE WRAPS AROUND THE PIPE.

REV.	DATE	DESCRIPTION
△		
△		
△		

CITY OF SACRAMENTO
DEPARTMENT OF UTILITIES

3 INCH & LARGER AIR VACUUM AND AIR RELEASE VALVE ABOVEGROUND INSTALLATIONS WITHOUT FLOODSAFE

APPR'D BY: _____ NO SCALE
DATE: SEPT 6, 2017 DWG. NO. **W-803**

R:\Utilstds_New_Std_Details\Water_Utilities\W-803

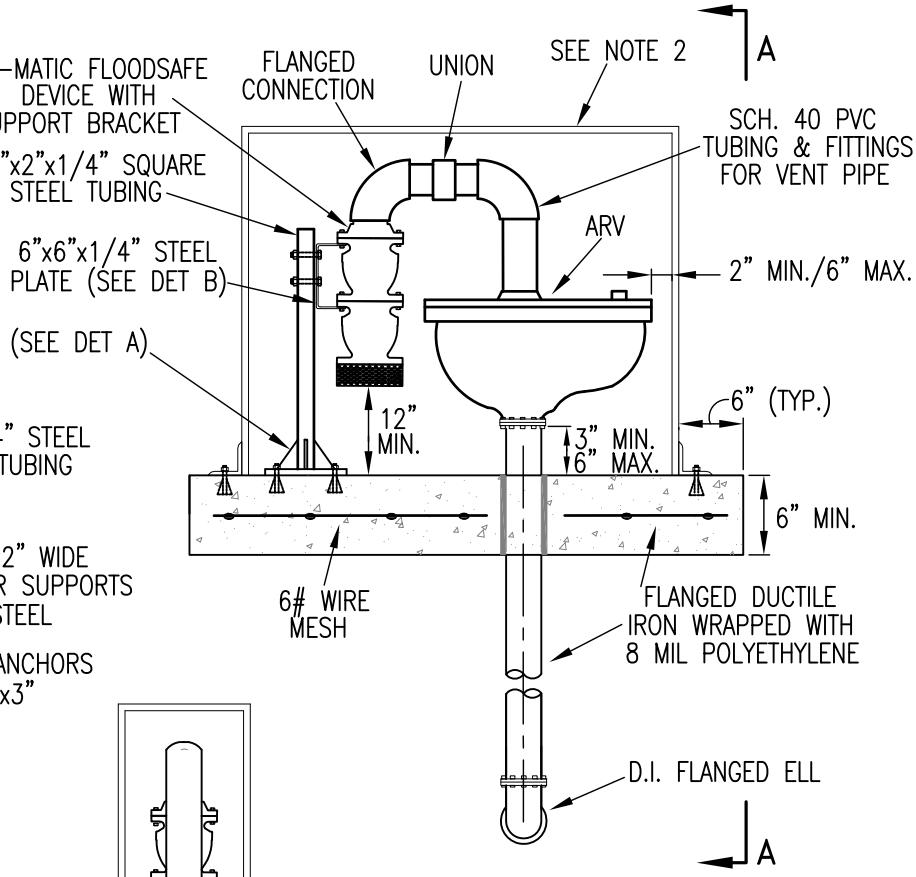

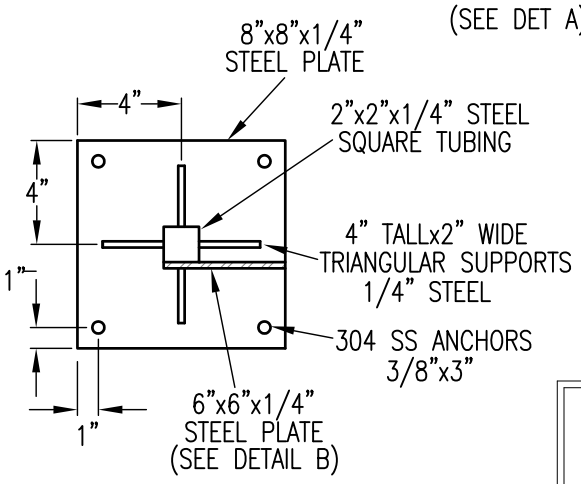

DETAIL A

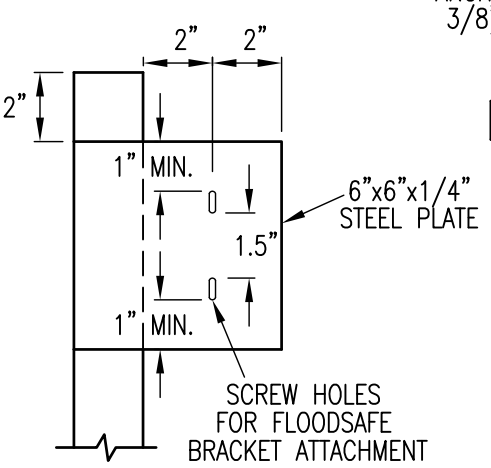

DETAIL B

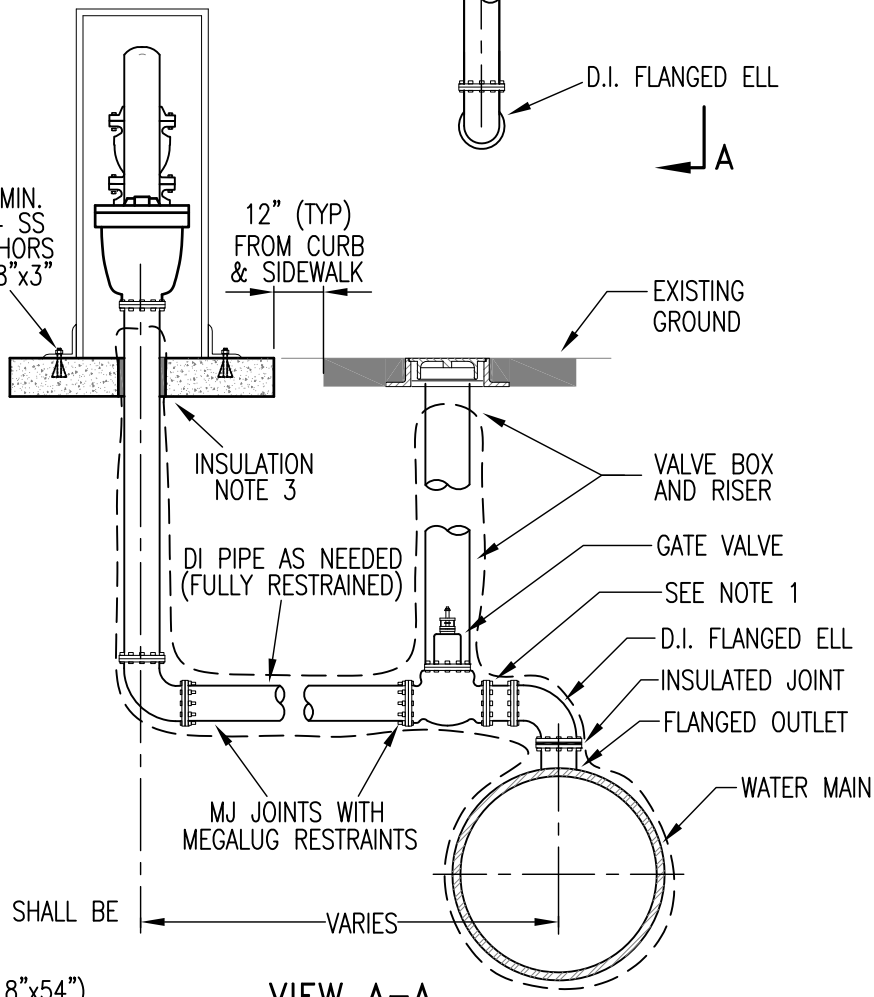

VIEW A–A

NOTE:

1. FOR D.I. WATER MAIN, INSULATED JOINT SHALL BE LOCATED AT THE GATE VALVE.
2. PLACER WATER WORKS SJARV–C (36"x18"x54"), GUARDSHACK GS–M4, OR APPROVED EQUAL.
3. 3/32"x6" POLYETHYLENE FOAM WRAP REQUIRED, THREE WRAPS AROUND THE PIPE.

REV.	DATE	DESCRIPTION
△		
△		
△		

CITY OF SACRAMENTO
DEPARTMENT OF UTILITIES

3 INCH & LARGER AIR VACUUM AND AIR RELEASE VALVE ABOVEGROUND INSTALLATIONS WITH FLOODSAFE

APPR'D BY: _____ NO SCALE
DATE: SEPT 6, 2017 DWG. NO. **W-803A**

R:\Utilstds_New_Std_Details\Water_Utilities\W-803A

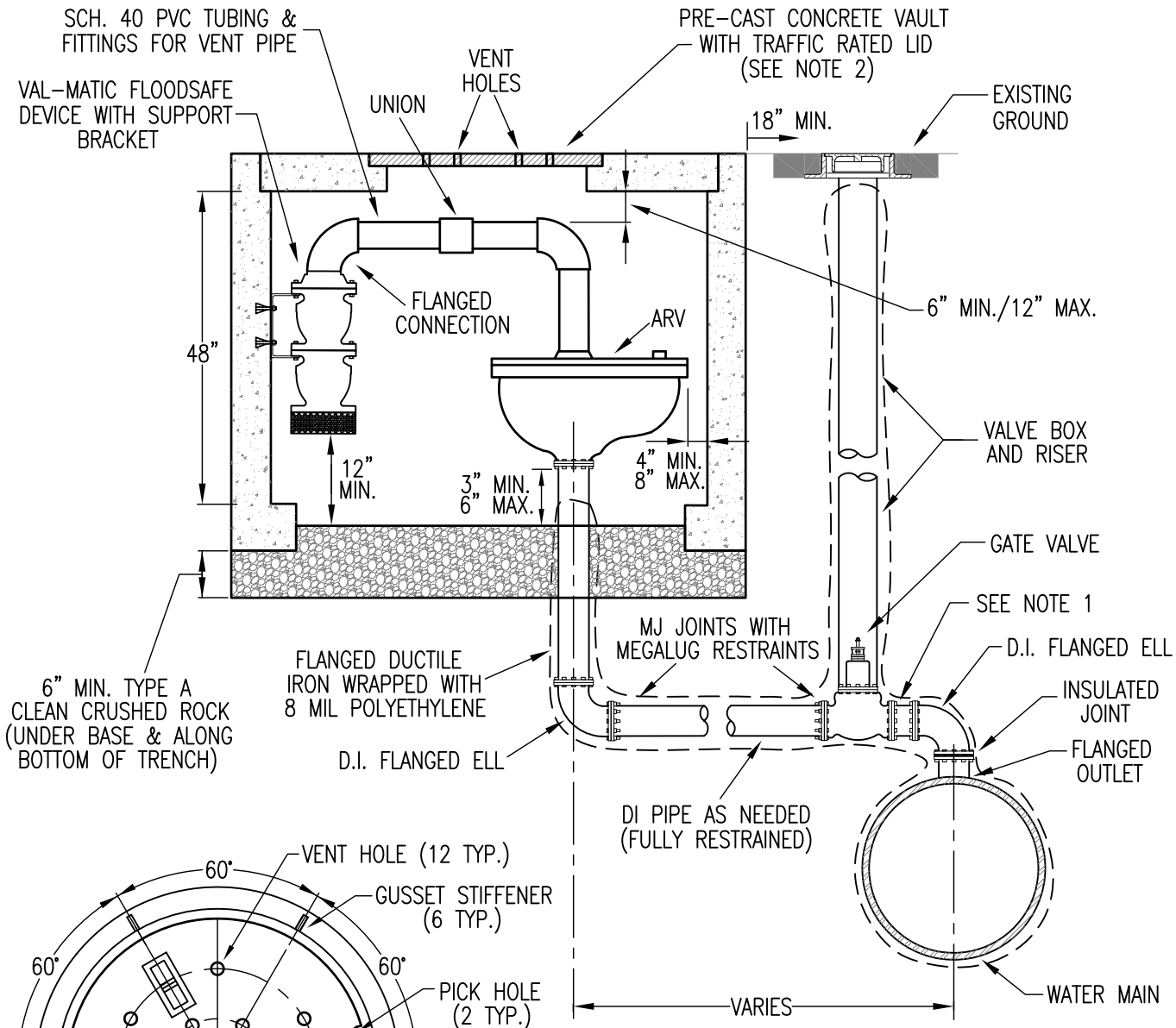

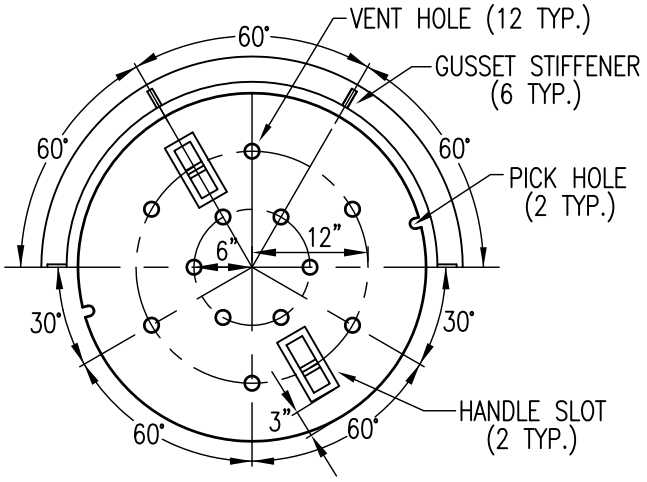

MANHOLE COVER

NOTE:

1. FOR D.I. WATER MAIN, INSULATED JOINT SHALL BE LOCATED AT THE GATE VALVE.
2. VAULT SHALL BE JENSEN PRE-CAST DESIGN, OR APPROVED EQUAL. WHEN VAULT IS WITHIN VEHICULAR TRAFFICKED RIGHT-OF-WAY, LID SHALL BE A REMOVABLE TOP SLAB WITH A 36" DIAMETER RING & COVER (WITH A MIN. OF 12-1.5" DIAMETER EVENLY SPACED VENT HOLES) AND A DIAMOND PLATE SURFACE. WHEN VAULT IS WITHIN AREAS WITHOUT VEHICULAR TRAFFIC, LID SHALL BE TORSION SPRING ASSISTED DOORS WITH A SLIP RESISTANT TEXTURED SURFACE.
3. VAULT SHALL HAVE AN INTERIOR DEPTH OF 48", AN INTERIOR WIDTH OF 48", AND A MINIMUM LENGTH OF 48".

REV.	DATE	DESCRIPTION
△		
△		
△		

CITY OF SACRAMENTO
DEPARTMENT OF UTILITIES

3 INCH & LARGER AIR VACUUM AND AIR RELEASE VALVE UNDERGROUND INSTALLATIONS (VAULT)

APPR'D BY: _____ NO SCALE
DATE: SEPT 6, 2017 DWG. NO. **W-803B**

R:\Utilstds_New_Std_Details\Water_Utilities\W-803B

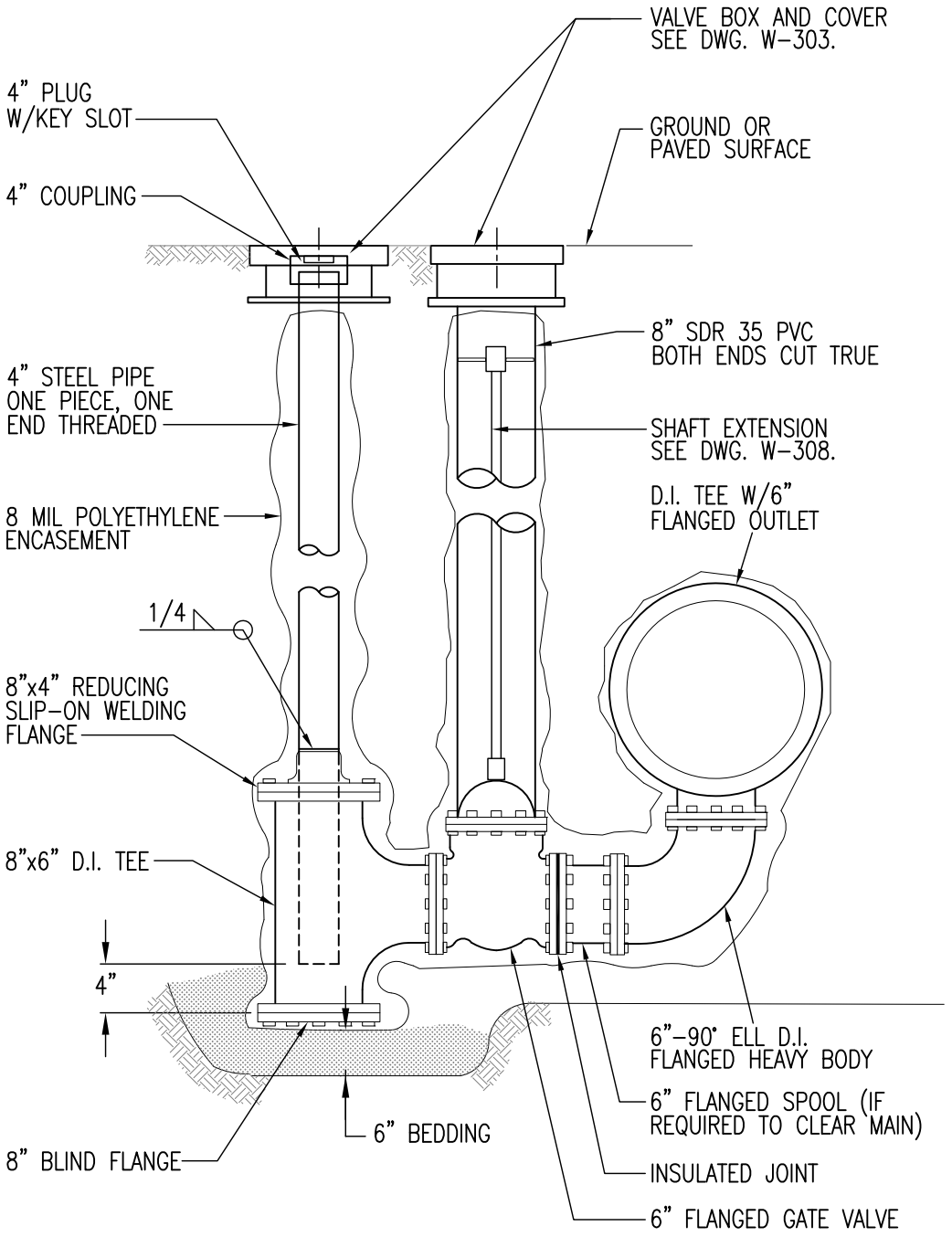

REV.	DATE	DESCRIPTION
△		
△		
△		

CITY OF SACRAMENTO
DEPARTMENT OF UTILITIES

6-INCH BLOW OFF FOR
DUCTILE IRON PIPE

APPR'D BY: _____ NO SCALE
DATE: SEPT 6, 2017 DWG. NO. **W-804**

R:\Utilstds_New_Std_Details\Water_Utilities\W-804

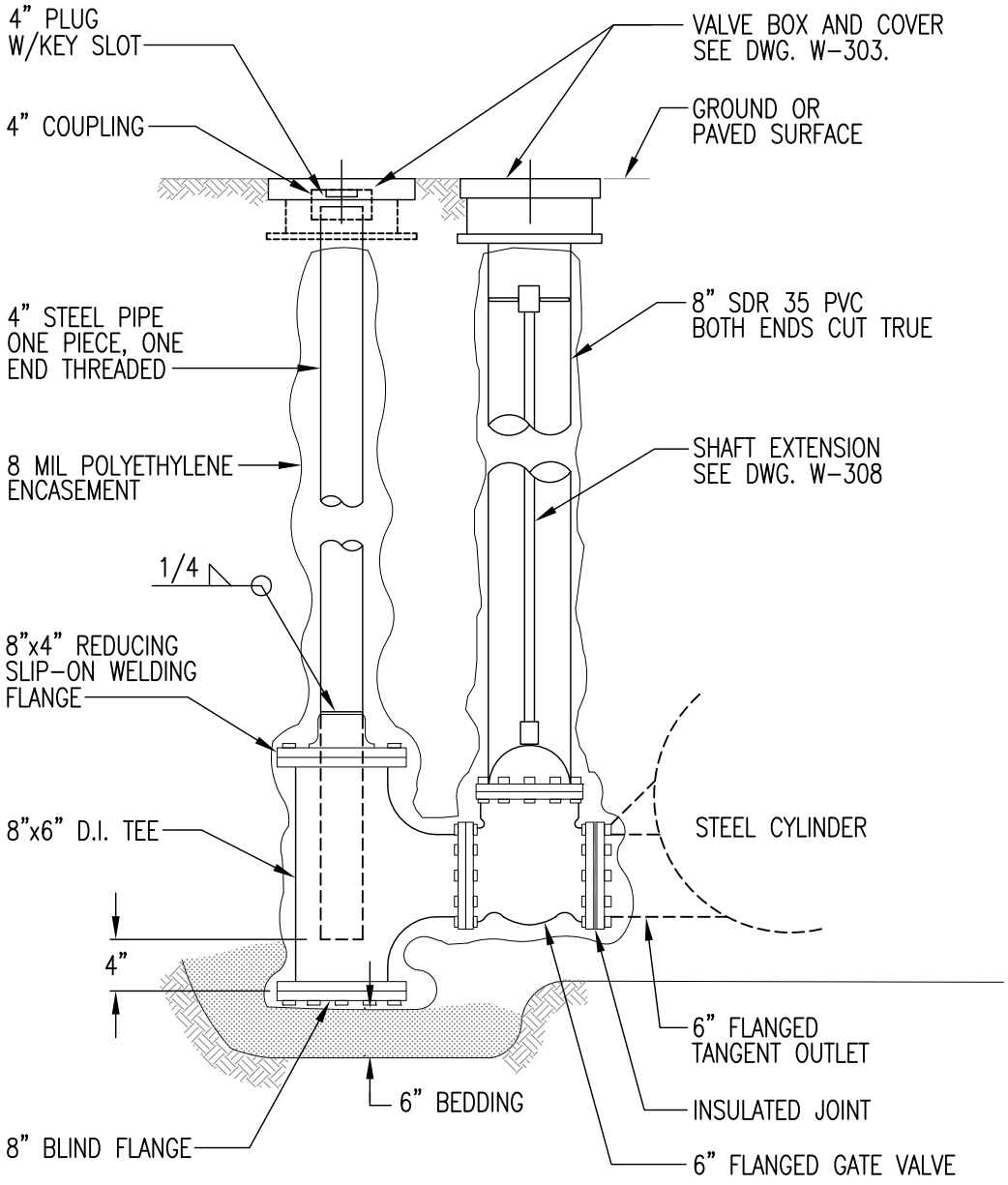

REV.	DATE	DESCRIPTION
△		
△		
△		

CITY OF SACRAMENTO
DEPARTMENT OF UTILITIES

6-INCH BLOW OFF FOR WELDED STEEL AND CONCRETE CYLINDER PIPE

APPR'D BY: _____ NO SCALE
DATE: SEPT 6, 2017 DWG. NO. **W-805**

R:\Utilstds_New_Std_Details\Water_Utilities\W-805

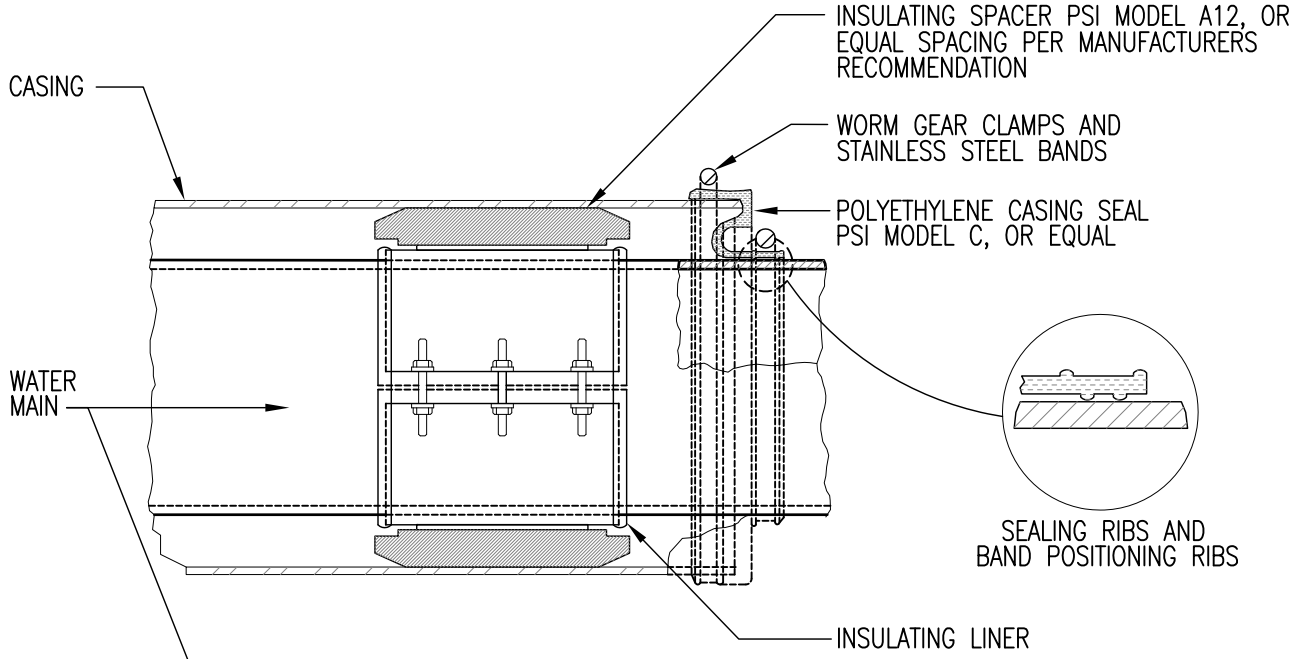

SECTIONAL ELEVATION

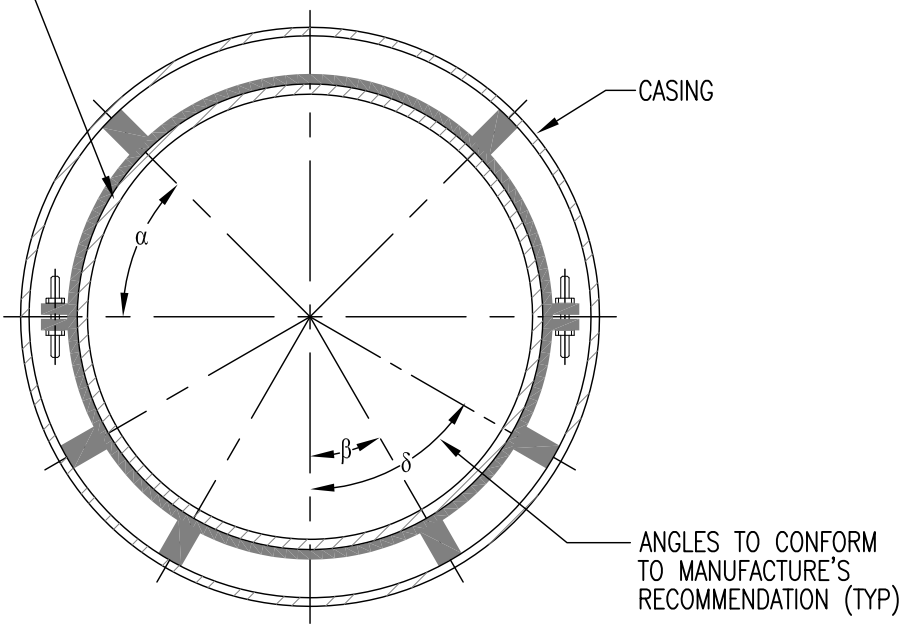

SECTION

NOTE:

1. WRAP WSP OR DIP WATER MAINS IN 8 MIL POLYETHYLENE THRU CASING THAT IS TO BE FILLED WITH SAND OR OTHER MEDIA. OMIT POLYETHYLENE WRAP THRU SEALED CASING SECTIONS THAT ARE NOT FILLED.

REV.	DATE	DESCRIPTION
△		
△		
△		

CITY OF SACRAMENTO **DEPARTMENT OF UTILITIES**	CASING INSULATOR SPACING ASSEMBLY	APPR'D BY: Walter O. Brash NO SCALE DATE: APRIL 2012 DWG. NO. **W-901**

R:\Utilstds_New_Std_Details\Water_Utilities\W-901

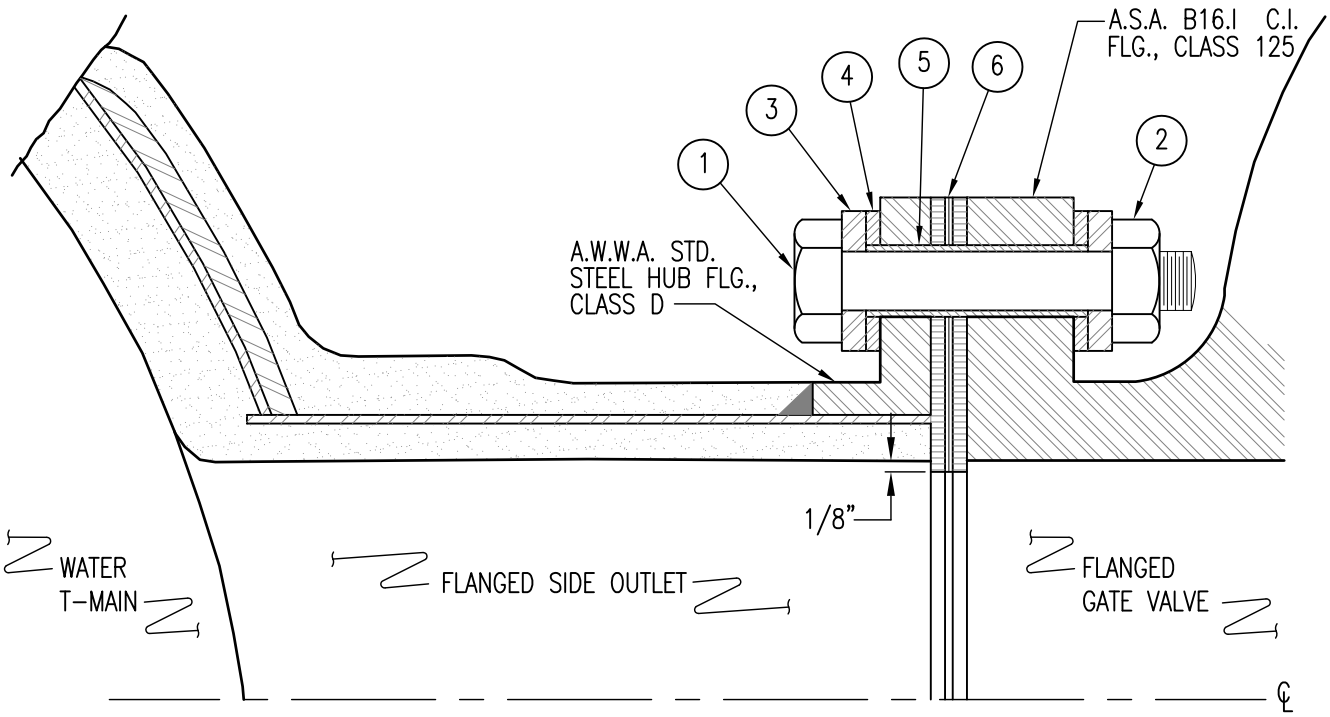

ITEM	DESCRIPTION		NOMINAL SIZE (IN.)			
		PIPE SIZE	6	8	10	12
1.	HEX HEAD BOLT, AM. STD. N.C. THREAD. STAINLESS STEEL HEX HEAD BOLT, TYPE 304 (ASTM F593, GROUP 1)	QUANTITY	8	8	10	12
		DIAMETER	3/4	3/4	7/8	7/8
		MIN. LENGTH	3 1/2	3 3/4	4	4
2.	HEX NUT. STAINLESS STEEL NUT, TYPE 304 (ASTM F594, GROUP 1) SIZE AND THREAD TO FIT HEX HEAD BOLT.	QUANTITY	8	8	12	12
3.	STEEL WASHER, 1/4" THICK, ROUND, FACES TO BE FLAT AND PARALLEL, STAINLESS STEEL.	QUANTITY	16	16	24	24
		O. DIAMETER	1 9/16	1 9/16	1 3/4	1 3/4
		I. DIAMETER	13/16	13/16	15/16	15/16
4.	INSULATING WASHER, 1/8" THICK, FABRIC REINFORCED BAKELITE, SLIP FIT OVER SLEEVE.	QUANTITY	16	16	24	24
		O. DIAMETER	1 9/16	1 9/16	1 3/4	1 3/4
		I. DIAMETER	13/16	13/16	15/16	15/16
5.	INSULATING SLEEVE, 1/32" WALL THICKNESS FABRIC REINFORCED BAKELITE.	QUANTITY	8	8	12	12
		I. DIAMETER	3/4	3/4	7/8	7/8
		LENGTH				*
6.	INSULATING GASKET, 1/8" THICK, MICARTA, FULL FACE, AM. STD. CLASS 150 FLANGE DRILLING, NEOPRENE FACED.	O. DIAMETER	11	13 1/2	16	19
		I. DIAMETER	I.D. OF LINED OUTLET, MINUS 1/8"			

* FIELD CUT TO ENGAGE INSULATING WASHERS.

NOTES:

1. VALVE AND FLANGE TO BE WRAPPED WITH 8 MIL POLYETHYLENE ENCASEMENT, AFTER ASSEMBLY.
2. RESISTANCE ACROSS FLANGE TO BE 50,000 OHMS OR HIGHER.
3. COMPONENTS ARE FOR 150 P.S.I. CLASS.

REV.	DATE	DESCRIPTION
△		
△		
△		

CITY OF SACRAMENTO
DEPARTMENT OF UTILITIES

FLANGE INSULATOR FOR T-MAIN SIDE OUTLET THRU 12-INCH PIPE2

APPR'D BY: _____ NO SCALE

DATE: SEPT 6, 2017 DWG. NO. **W-902**

R:\Utilstds_New_Std_Details\Water_Utilities\W-902

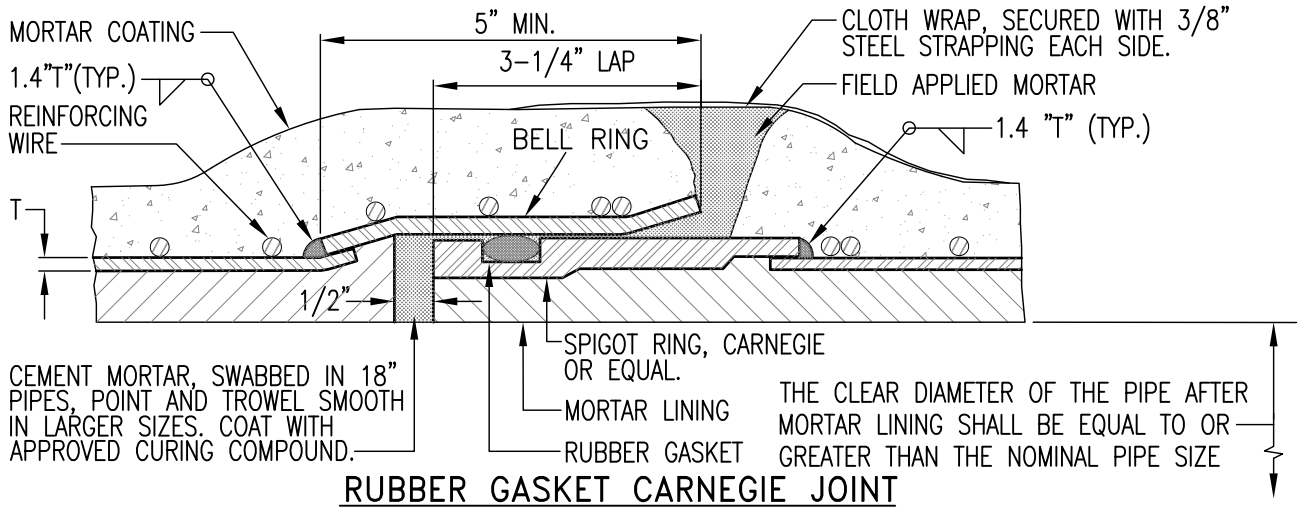

RUBBER GASKET CARNEGIE JOINT

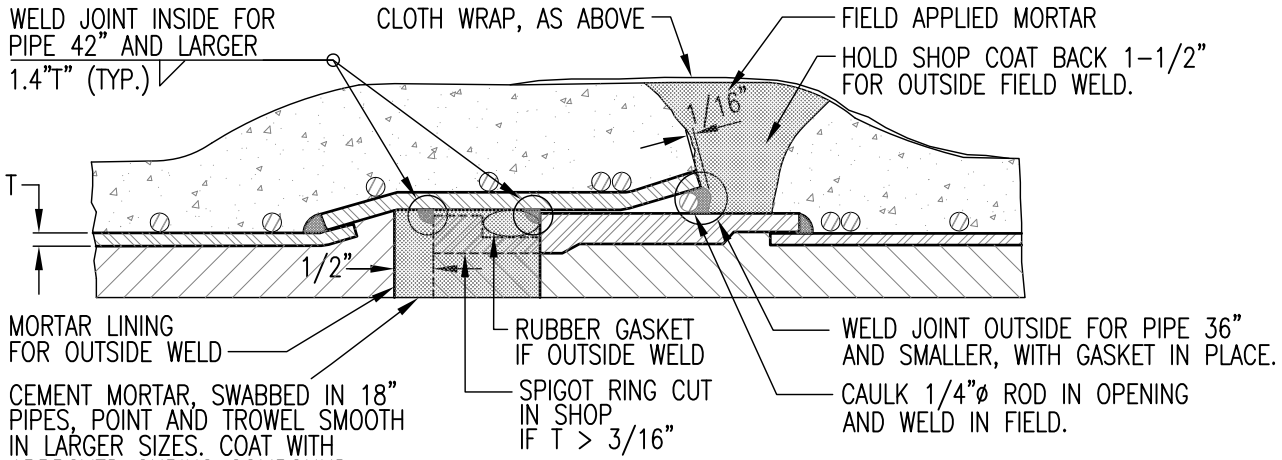

WELDED CARNEGIE JOINT

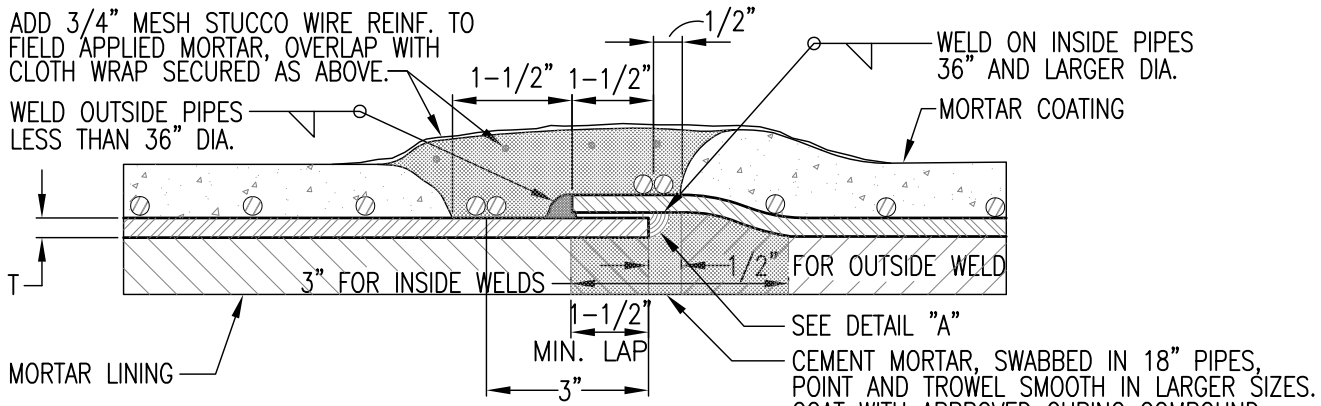

WELDED SLIP JOINT

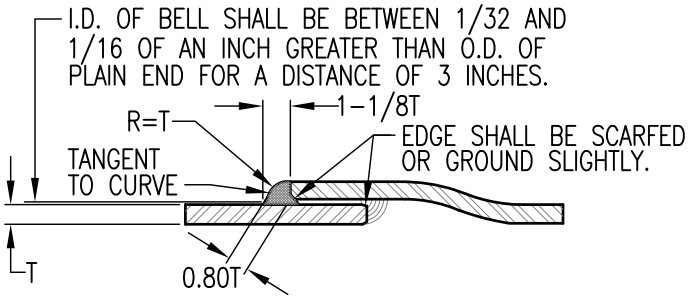

DETAIL "A"

NOTES:

1. WALL THICKNESS "T" SHALL BE DETERMINED BY THE PIPE MANUFACTURER. THE DESIGN OF THE PIPE SHALL CONFORM TO SECTION 10.
2. USE SPACERS TO GET 1/2" CLEARANCE FOR INSIDE MORTAR JOINT ON PIPE 24" AND LARGER.

REV.	DATE	DESCRIPTION
△		
△		
△		

CITY OF SACRAMENTO
DEPARTMENT OF UTILITIES

CCP AND WSP
JOINT DETAILS

APPR'D BY: Mike O. Booth NO SCALE
DATE: MAY 2007 DWG. NO. **W-903**

R:\Utilstds_New_Std_Details\Water_Utilities\W-903

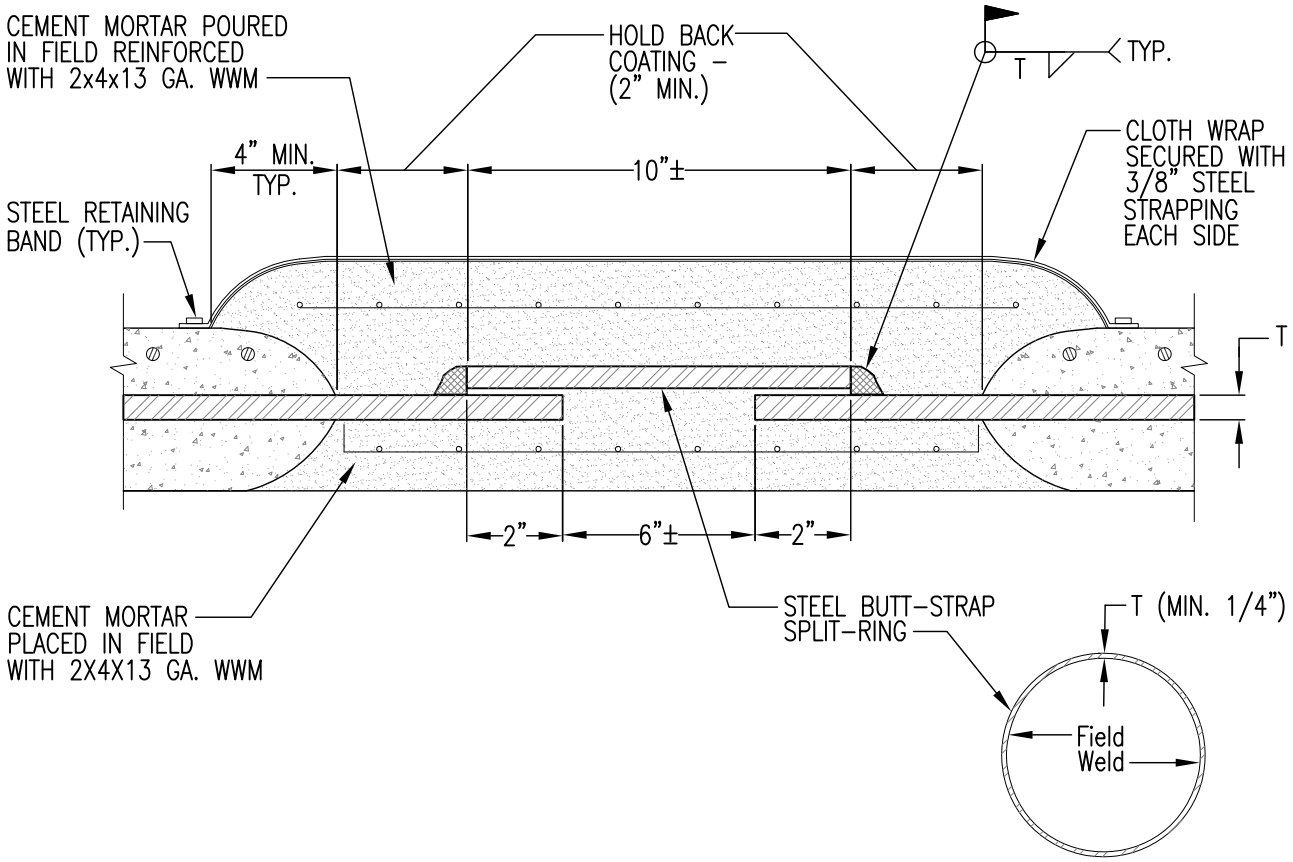

NOTES:

1. WALL THICKNESS "T" SHALL BE DETERMINED BY THE PIPE MANUFACTURER. THE DESIGN OF PIPE SHALL CONFORM TO SECTION 10.

REV.	DATE	DESCRIPTION
△		
△		
△		

CITY OF SACRAMENTO
DEPARTMENT OF UTILITIES

DETAIL OF FIELD WELDED BUTT-STRAP JOINT

APPR'D BY: Mike O. Brosh NO SCALE

DATE: MAY 2007 DWG. NO. **W-904**

R:\Utilstds_New_Std_Details\Water_Utilities\W-904

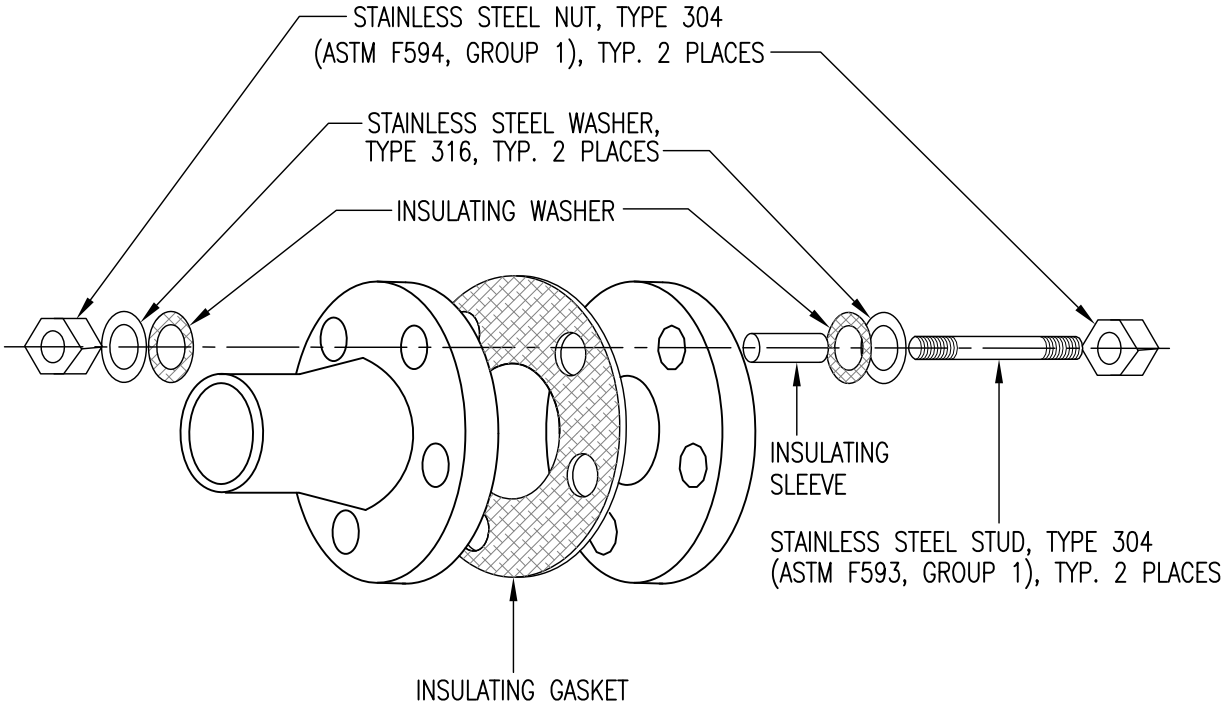

DIELECTRIC INSULATING JOINT FLANGE KIT

NOTE:

1. HARDWARE QUANTITIES IN INSULATING FLANGE KIT WILL VARY BASED ON GASKET PATTERN AND PIPE SIZE.
2. NUTS & STUDS SHALL BE AS SPECIFIED.

REV.	DATE	DESCRIPTION
△		
△		
△		

CITY OF SACRAMENTO **DEPARTMENT OF UTILITIES**	DIELECTRIC INSULATING FLANGE DETAIL	APPR'D BY: _____ NO SCALE DATE: SEPT 6, 2017 DWG. NO. **W-905**

R:\Utilstds_New_Std_Details\Water_Utilities\W-905

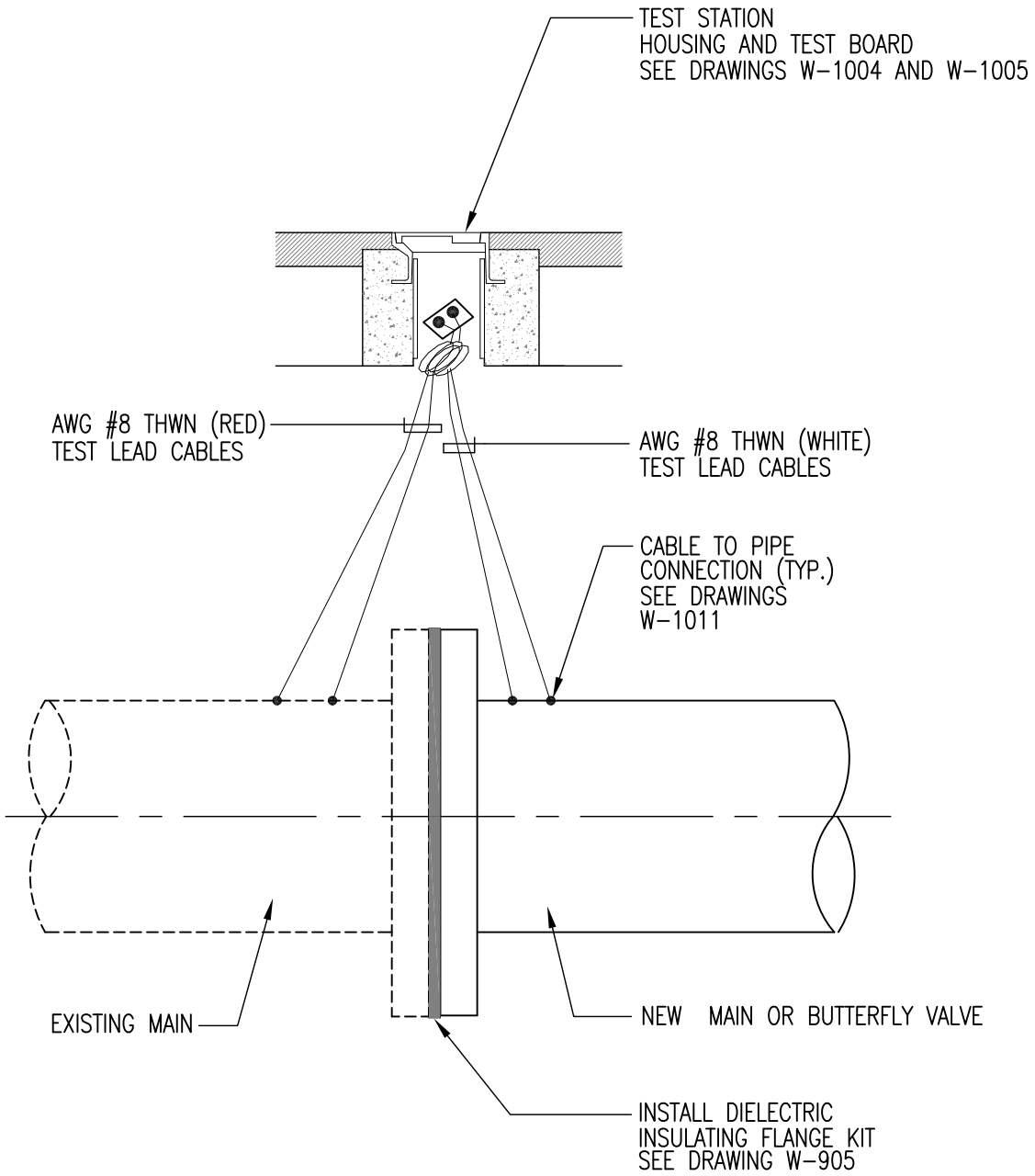

REV.	DATE	DESCRIPTION
△		
△		
△		

CITY OF SACRAMENTO
DEPARTMENT OF UTILITIES

INSULATING JOINT
TEST STATION

APPR'D BY: Mike O. Booth NO SCALE
DATE: MAY 2007 DWG. NO. **W-1001**

R:\Utilstds_New_Std_Details\Water_Utilities\W-1001

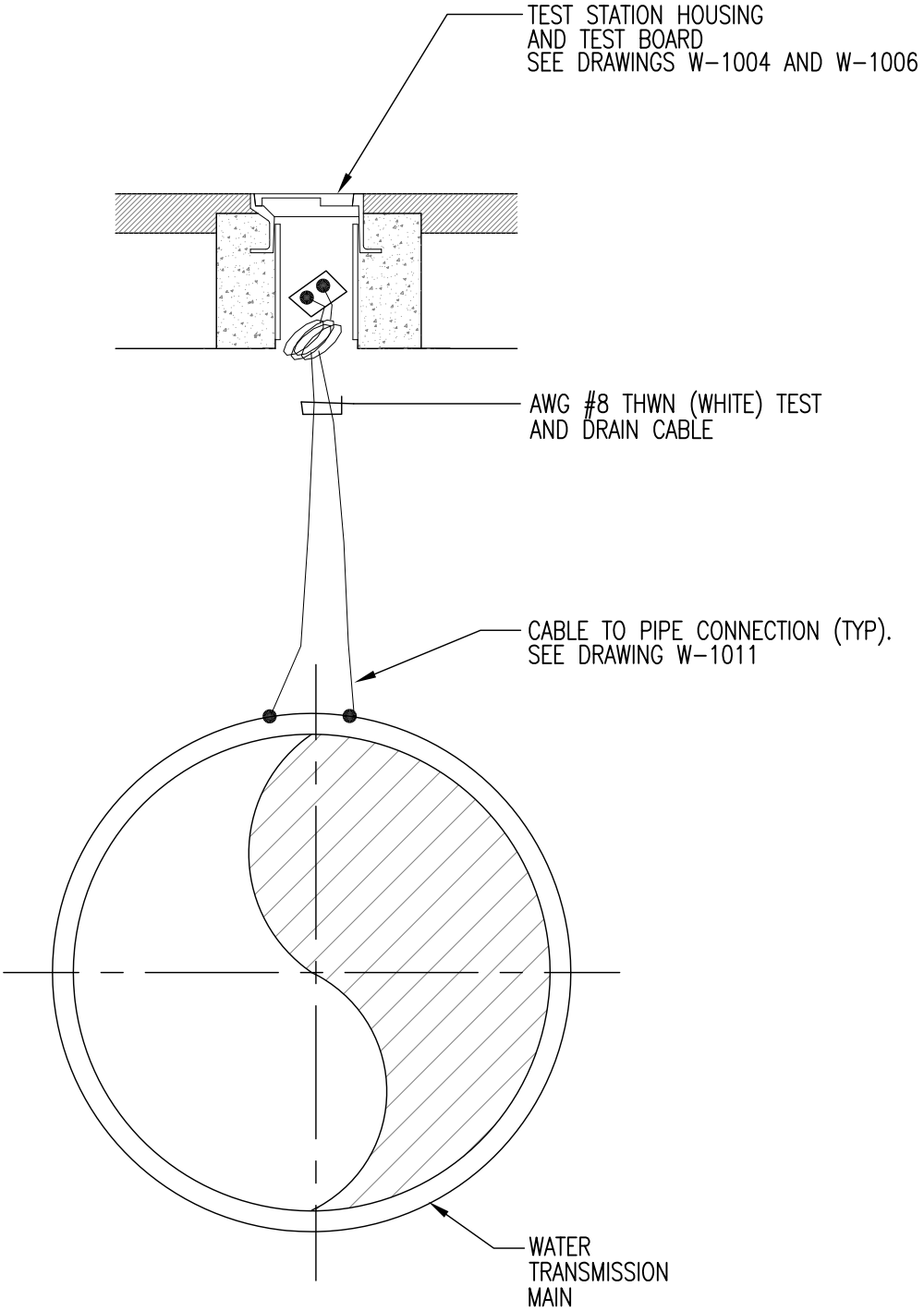

REV.	DATE	DESCRIPTION
△		
△		
△		

CITY OF SACRAMENTO
DEPARTMENT OF UTILITIES

TEST STATION
INSTALLATION DETAIL

APPR'D BY: Mike O. Booth NO SCALE
DATE: MAY 2007 DWG. NO. **W-1002**

R:\Utilstds_New_Std_Details\Water_Utilities\W-1002

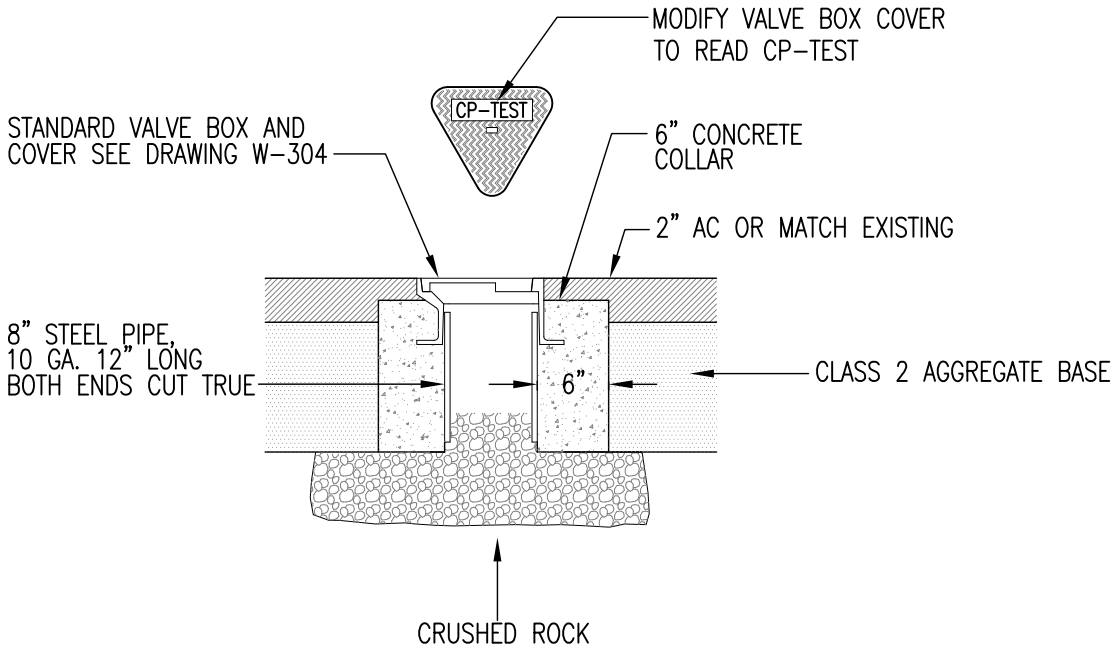

TEST STATION DETAIL IN TRAFFIC AREAS

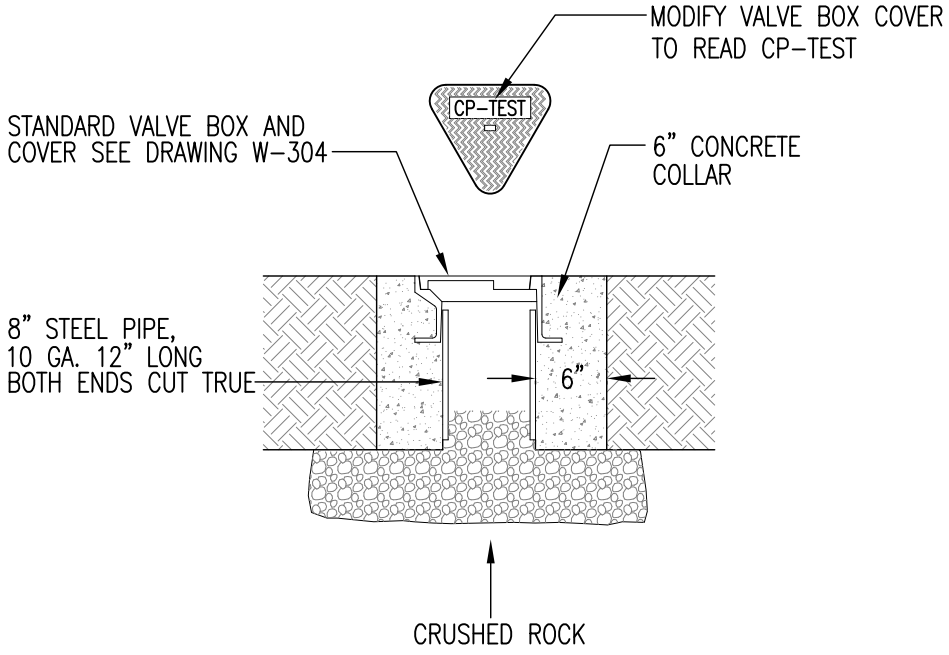

TEST STATION DETAIL IN NON-TRAFFIC AREAS

REV.	DATE	DESCRIPTION

CITY OF SACRAMENTO
DEPARTMENT OF UTILITIES

TEST STATION HOUSING DETAIL
IN TRAFFIC/NON-TRAFFIC AREAS

APPR'D BY: _____ NO SCALE
DATE: SEPT 6, 2017 DWG. NO. **W-1004**

R:\Utilstds_New_Std_Details\Water_Utilities\W-1004

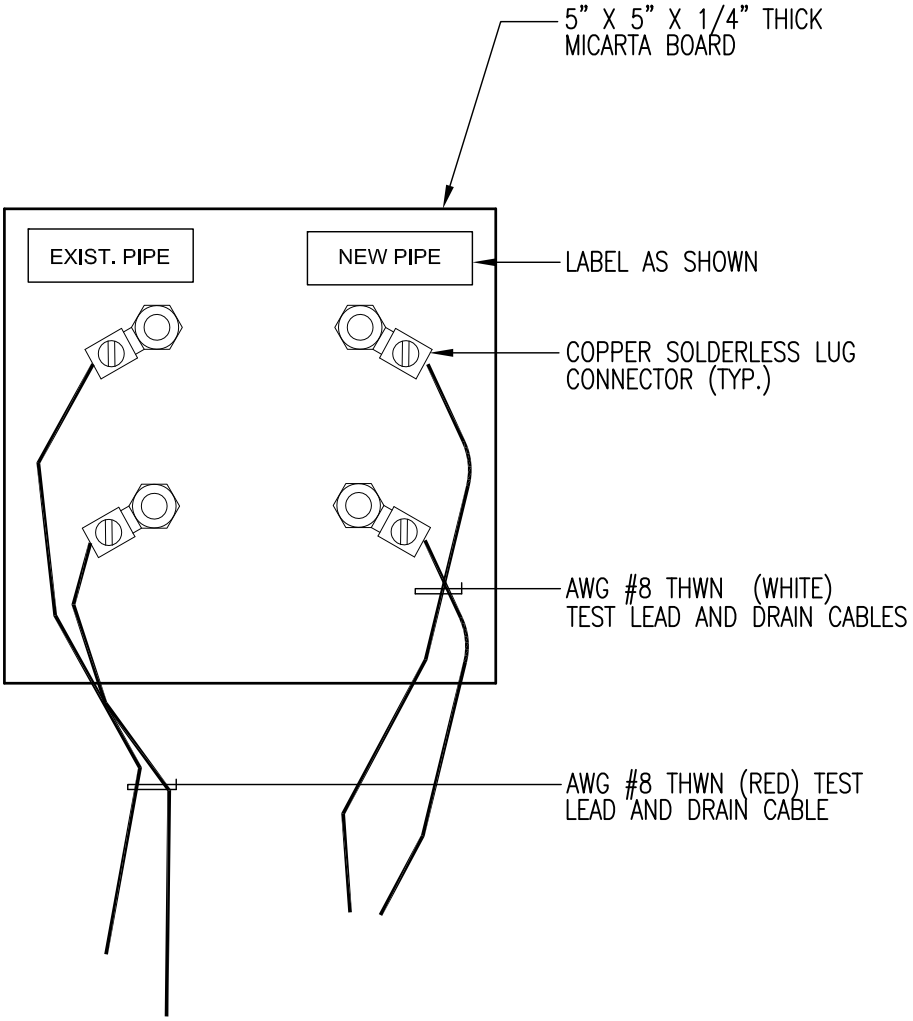

REV.	DATE	DESCRIPTION
△		
△		
△		

CITY OF SACRAMENTO
DEPARTMENT OF UTILITIES

INSULATING JOINT
TEST BOARD DETAIL

APPR'D BY: Mike O. Booth NO SCALE
DATE: MAY 2007 DWG. NO. **W-1005**

R:\Utilstds_New_Std_Details\Water_Utilities\W-1005

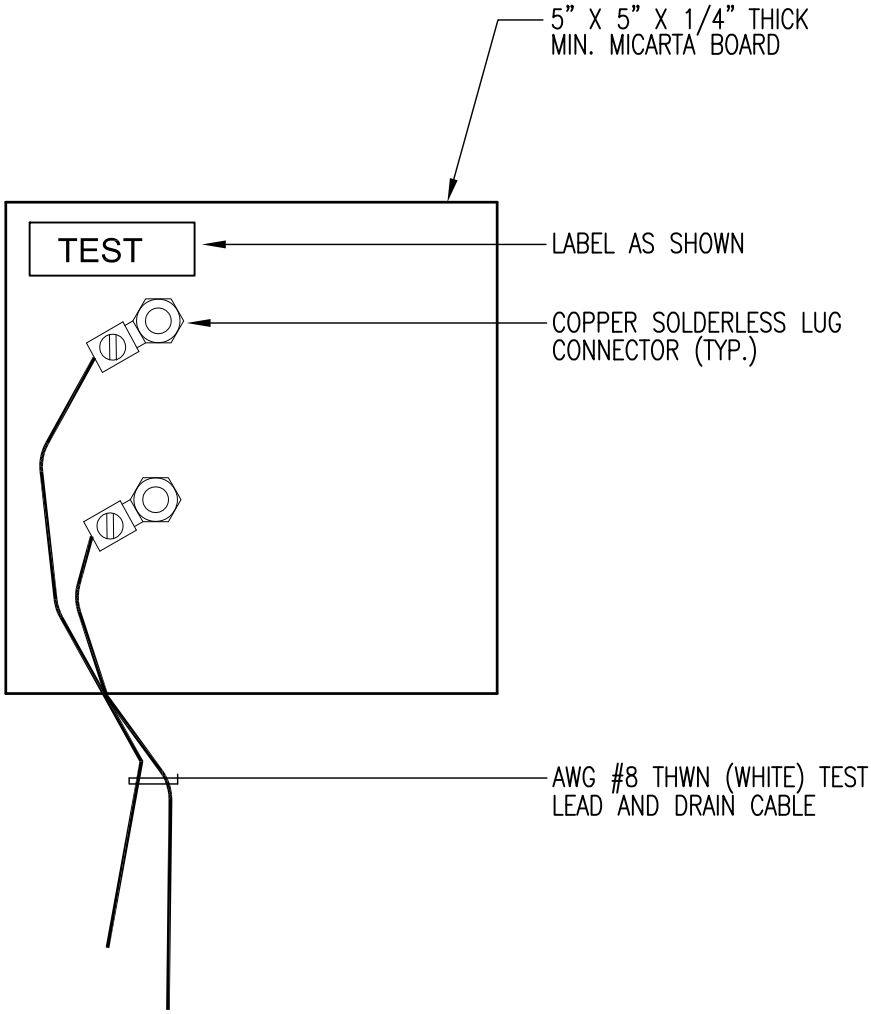

REV.	DATE	DESCRIPTION
△		
△		
△		

CITY OF SACRAMENTO **DEPARTMENT OF UTILITIES**	TEST BOARD DETAIL	APPR'D BY: Mike O. Booth NO SCALE DATE: MAY 2007 DWG. NO. **W-1006**

R:\Utilstds_New_Std_Details\Water_Utilities\W-1006

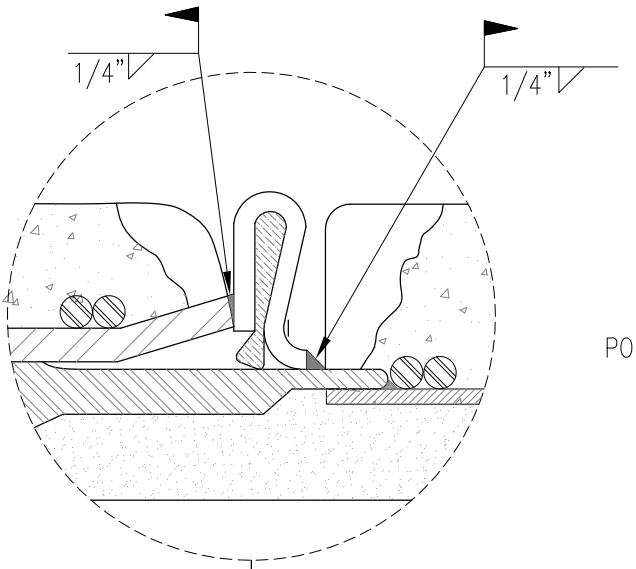

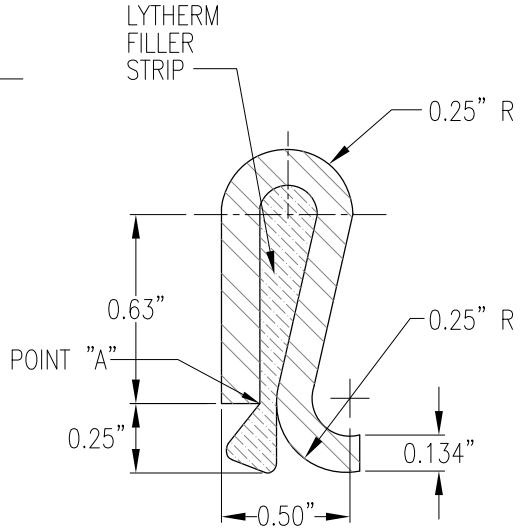

CLIP DETAIL

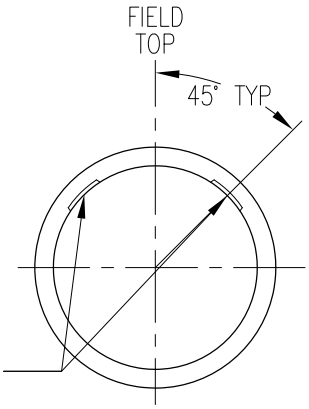

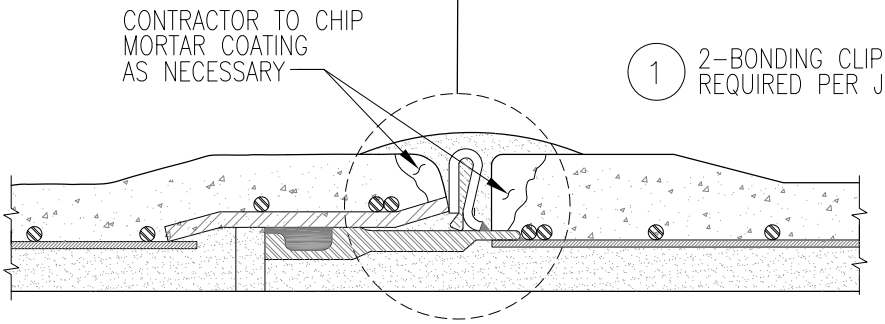

TYPICAL BONDING JOINT DETAIL

FIELD INSTALLATION PROCEDURE

PLACE BONDING CLIPS IN EXTERIOR JOINT RECESS AS SHOWN. WELD CLIPS TO BELL AND SPIGOT USING FILLET WELDS AS SHOWN. REMOVE SLAG FROM WELD AND FILL RECESS WITH CEMENT MORTAR COVERING ALL EXPOSED STEEL.

THE BONDING METHOD SHOWN PROVIDES ELECTRICAL CONDUCTIVITY ACROSS THE JOINT AND ACCOMMODATES RELATIVE MOVEMENT DUE TO PIPELINE SETTLEMENT. TO PROVIDE ACCESS FOR WELDING THE BONDS, RECESSES ARE CHIPPED IN THE MORTAR COATING AS REQUIRED AFTER FIELD ASSEMBLY. SEPARATE BONDING IS NOT REQUIRED WHEN JOINTS ARE FIELD WELDED.

NOTES:

1. STEEL BONDING CLIP:
   MATERIAL SPEC: ASTM A366
   CUT LENGTH: 2-1/2"±1/16"
   WIDTH: 1-1/4"±1/16"
2. LYTHERM FILLER STRIP TO BE 1"x1-1/2" WIDE TO OVERLAP SIDES OF CLIP
3. BONDING CLIP CRIMPED OVER FILLER AT "A" TO COMPRESS FILLER

REV.	DATE	DESCRIPTION
△		
△		
△		

CITY OF SACRAMENTO DEPARTMENT OF UTILITIES	CCP AND WS PIPE JOINT BOND CLIP DETAIL	APPR'D BY: _____ NO SCALE DATE: 05/07/19 DWG. NO. W-1009

R:\Utilstds_New_Std_Details\Water_Utilities\W-1009

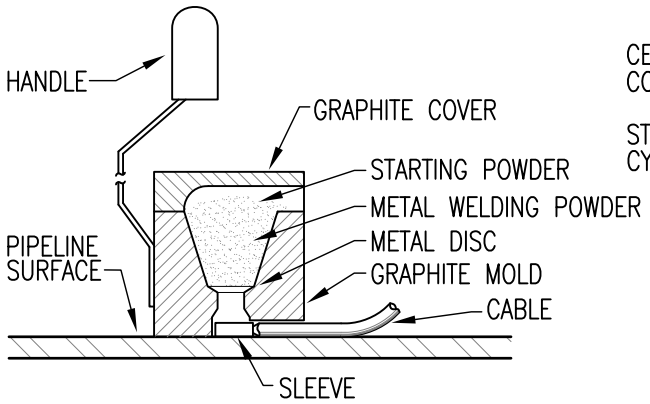

EXOTHERMIC WELD

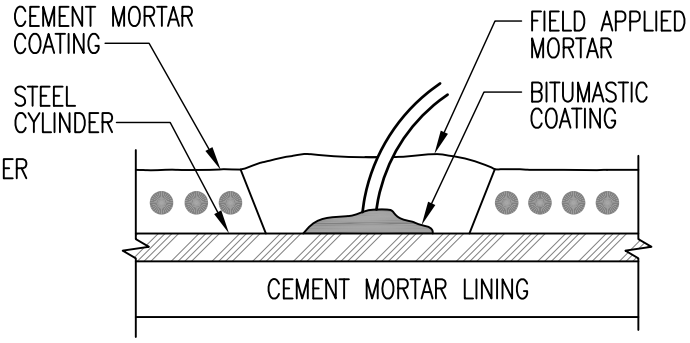

CABLE–TO–PIPE CONNECTION FOR CONCRETE CYLINDER AND WELDED STEEL PIPE

EXOTHERMIC WELD PROCEDURE

STEP 1. FILE STRUCTURE CONNECTION AREA TO BARE SHINY METAL AND CLEAN.

STEP 2. STRIP INSULATION FROM WIRE. ATTACH SLEEVE (REQUIRED ON #6 AWG WIRE OR SMALLER.)

STEP 3. HOLD MOLD FIRMLY WITH OPENING AWAY FROM OPERATOR AND IGNITE WITH FLINT GUN.

STEP 4. REMOVE SLAG FROM CONNECTION AND PEEN WELD FOR SOUNDNESS, WITH CHIPPING HAMMER.

STEP 5. ONCE WELD HAS COOLED, COMPLETELY COVER CONNECTION AND EXPOSED STRUCTURE SURFACE WITH EPOXY COATING COMPOUND. PLACE WELD CAP OVER CONNECTION.

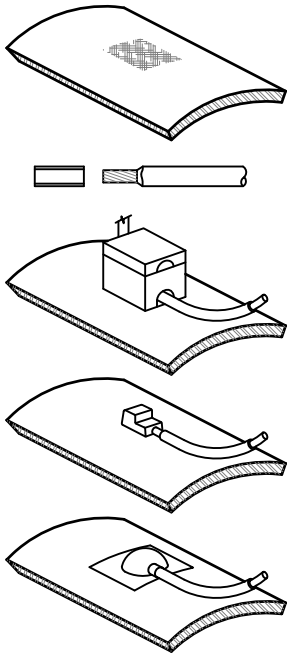

NOTES

1. EXOTHERMIC WELD PROCEDURE SHOWN ABOVE IS TO BE USED AS A GENERAL GUIDE ONLY. CONSULT MANUFACTURER'S LITERATURE FOR SPECIFIC SIZE AND INSTALLATION INSTRUCTIONS.
2. PUTTY USED FOR THE CABLE TO PIPE CONNECTION SEAL DAM (THERMITE CONNECTIONS) SHALL BE "A+B" EPOXY AS MANUFACTURED BY BIGGS COMPANY, OR EQUAL. ALL BONDS SHALL BE INSPECTED PRIOR TO BACKFILLING TRENCH.
3. ALL WIRE WELDS SHALL BE A MINIMUM OF 6–INCHES APART.
4. REPAIR ALL DAMAGE TO COATING AND LINING IN ACCORDANCE WITH MANUFACTURER'S RECOMMENDATIONS.

REV.	DATE	DESCRIPTION
△		
△		
△		

CITY OF SACRAMENTO
DEPARTMENT OF UTILITIES

EXOTHERMIC WELDS

APPR'D BY: _____ NO SCALE

DATE: SEPT 6, 2017 DWG. NO. **W-1011**

R:\Utilstds_New_Std_Details\Water_Utilities\W-1011

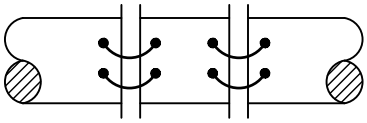

SPOOL

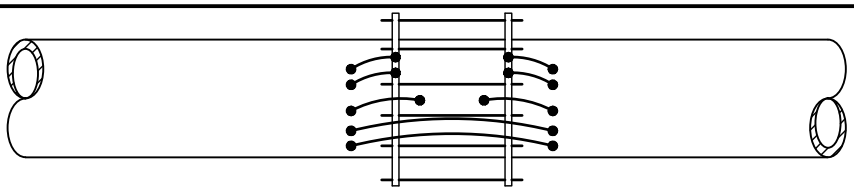

FLEXIBLE COUPLING

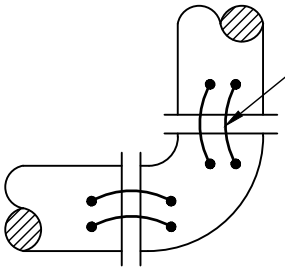

BEND

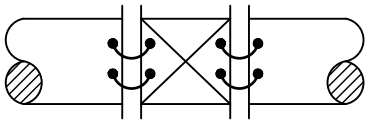

VALVE

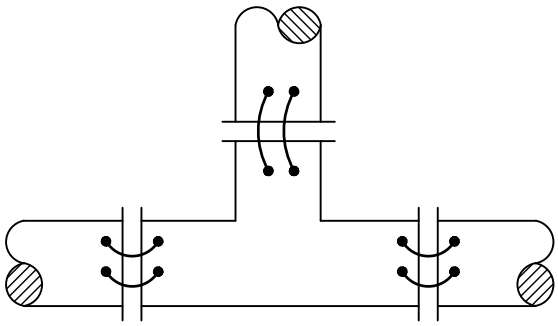

TEE

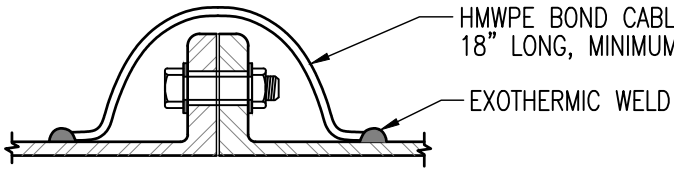

FLANGED JOINT

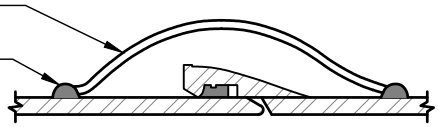

PUSH-ON JOINT

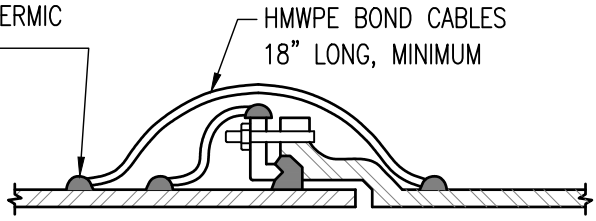

MECHANICAL JOINT

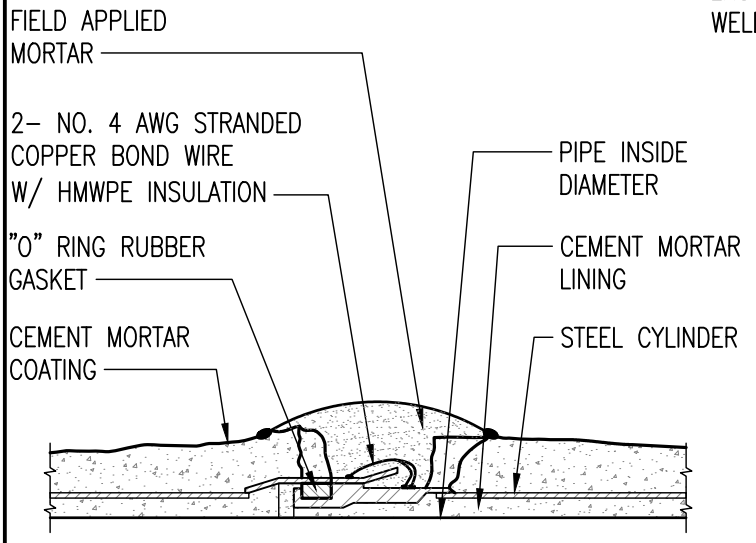

SECTION A-A

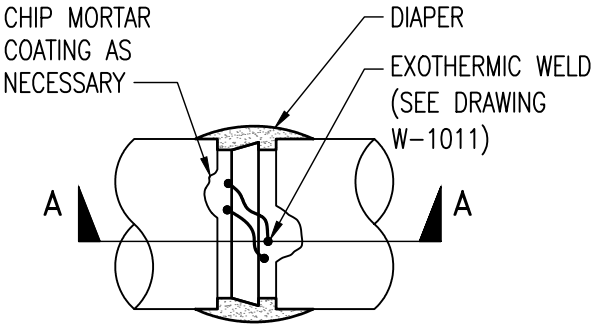

NOTES:

1. BOND WIRES SHALL NOT BE INSTALLED ACCROSS INSULATING JOINTS OR WELDED JOINTS.
2. FOR 14" AND LARGER DIAMETER PIPE AND FITTINGS, BOND WIRE SHALL BE #4 AWG/HMWPE AND TWO WIRES ARE REQUIRED PER JOINT.
3. FOR 12" DIAMETER AND SMALLER PIPE AND FITTINGS, BOND WIRE SHALL BE #8 AWG/HMWPE AND ONE WIRE IS REQUIRED PER JOINT.

REV.	DATE	DESCRIPTION
△		
△		
△		

R:\Utilstds_New_Std_Details\Water_Utilities\W-1012

CITY OF SACRAMENTO
DEPARTMENT OF UTILITIES

JOINT BOND CABLE DETAIL
DUCTILE -WS-CCP

APPR'D BY: _____ NO SCALE
DATE: 05/07/19 DWG. NO. **W-1012**

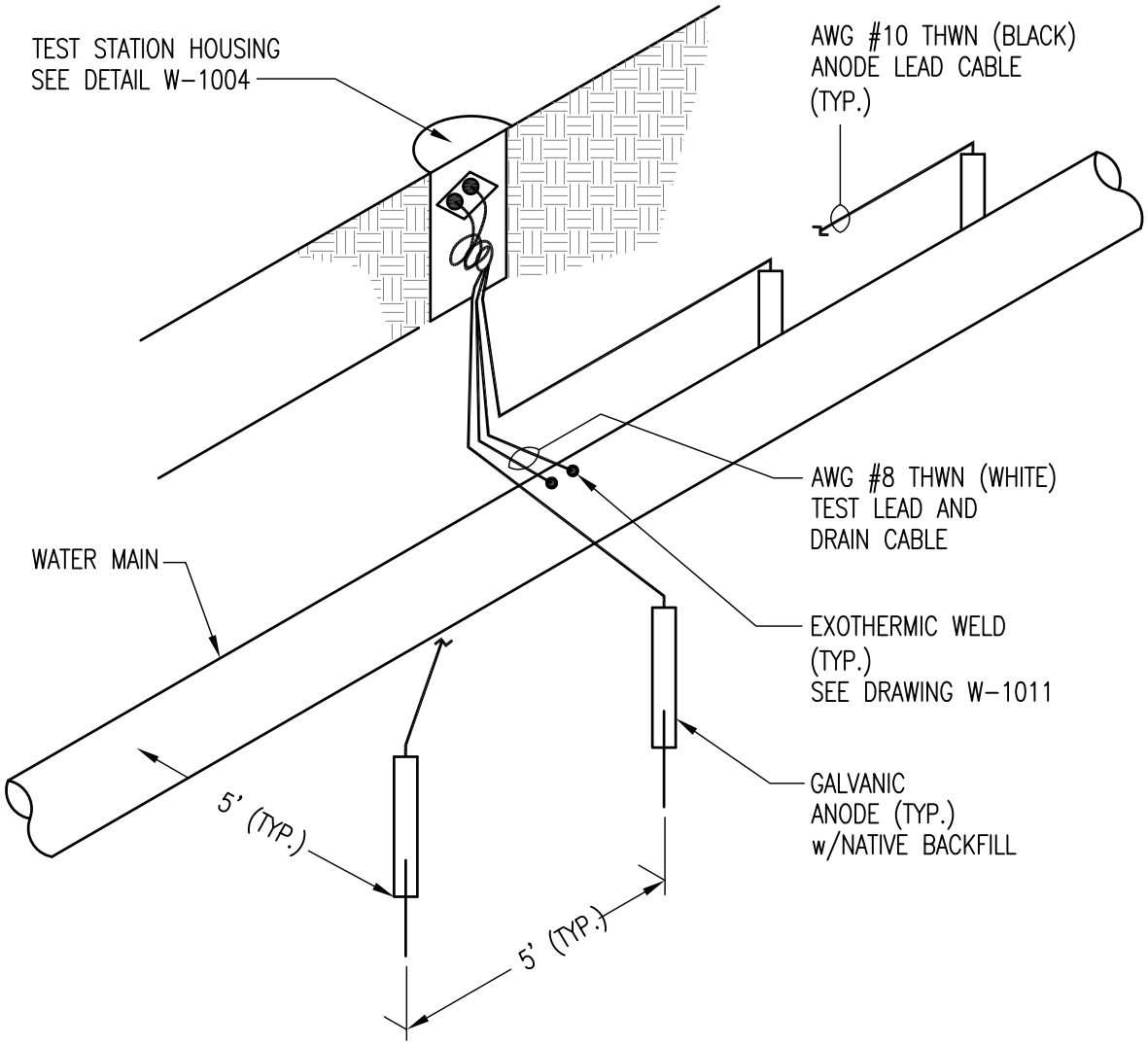

NOTES:

1. INSTALL ANODES 5-FT (HORIZONTAL) OFF THE PIPE/FITTING IN NATIVE SOIL, A MIN. OF 1-FT DEEPER THAN THE FACILITY IT IS PROTECTING.
2. ANODES SHALL BE KEPT A MIN. OF 3-FT FROM STORM DRAIN AND SEWER FACILITIES, AND 5-FT FROM ALL OTHER UTILITIES (INCLUDING, BUT NOT LIMITED TO, GAS, ELECTRICAL, PHONE & CABLE)
3. ANODES MAY BE INSTALLED HORIZONTALLY OR VERTICALLY, UNLESS SPECIFICALLY DIRECTED BY THE ENGINEER.
4. ANODES SHALL BE TESTED FOR CURRENT POTENTIAL PRIOR TO EXOTHERMIC WELD TO PIPE OR CONNECTION TO TEST STATION. ANODES SHALL BE SOAKED WITH WATER AND BURIED IN NATIVE SOIL PRIOR TO TESTING. ALL ANODES SHALL BE WITHIN ±100mV FROM −1700mV (AS IT RELATES TO COPPER SULFATE) TO BE CONSIDERED A "HIGH POTENTIAL" MAGNESIUM ANODE. ALL ANODES NOT MEETING THIS CRITERIA SHALL BE REPLACED.

REV.	DATE	DESCRIPTION
△		
△		
△		

CITY OF SACRAMENTO
DEPARTMENT OF UTILITIES

GALVANIC ANODE
INSTALLATION DETAIL

APPR'D BY: _____ NO SCALE
DATE: SEPT 6, 2017 DWG. NO. **W-1013**

R:\Utilstds_New_Std_Details\Water_Utilities\W-1013

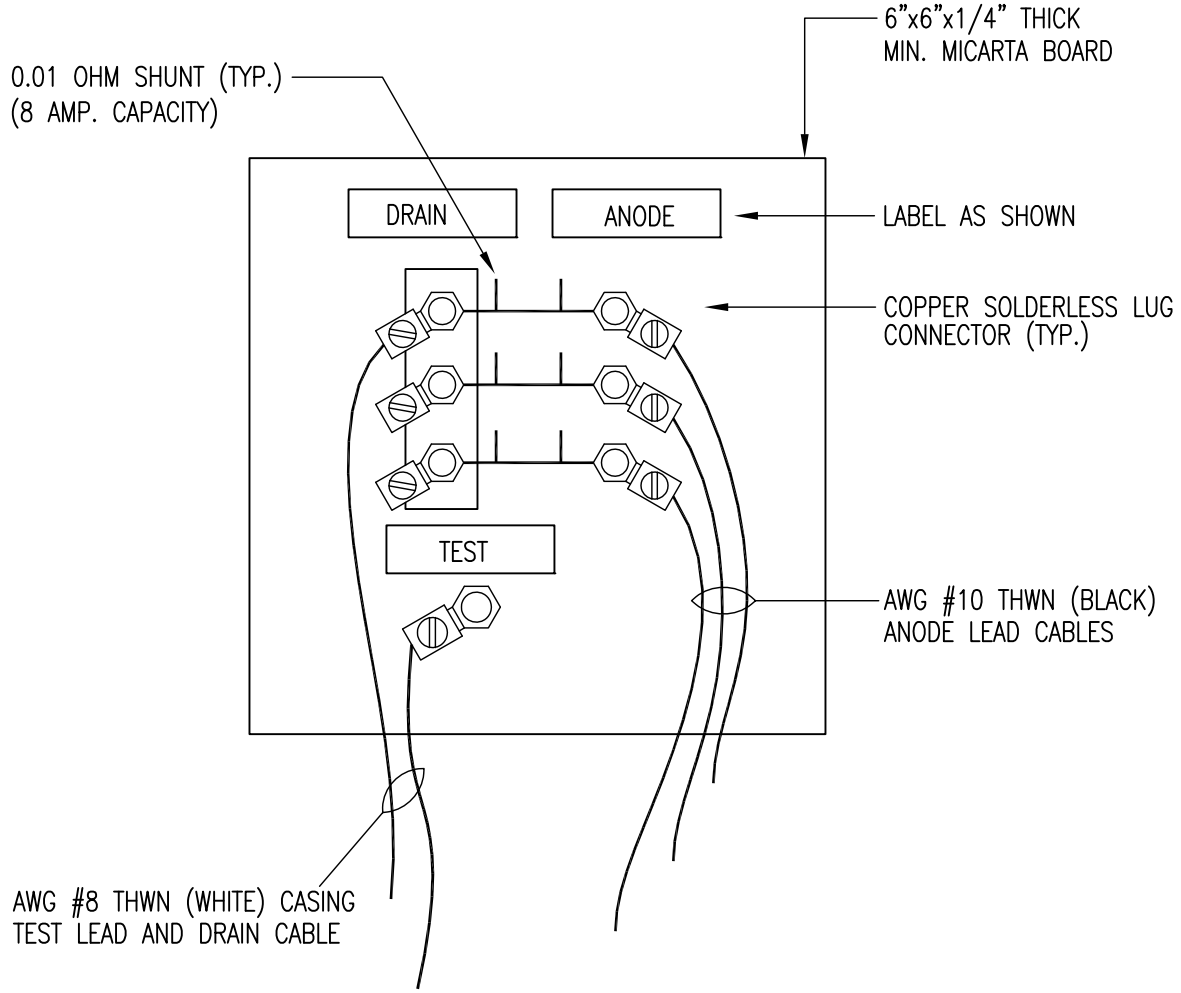

REV.	DATE	DESCRIPTION
△		
△		
△		

CITY OF SACRAMENTO **DEPARTMENT OF UTILITIES**	ANODE TEST BOARD DETAIL	APPR'D BY: Melvin O. Booth NO SCALE DATE: MAY 2007 DWG. NO. **W-1014**

R:\Utilstds_New_Std_Details\Water_Utilities\W-1014

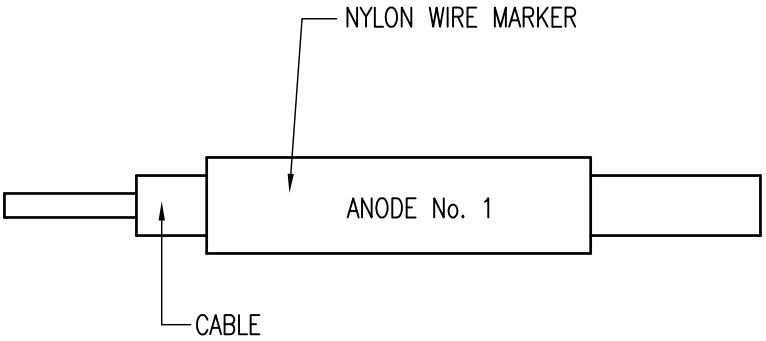

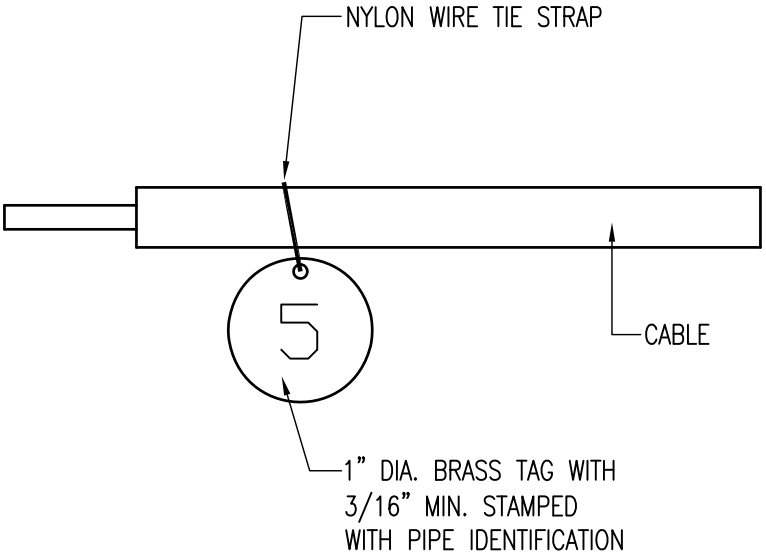

REV.	DATE	DESCRIPTION
△		
△		
△		

CITY OF SACRAMENTO
DEPARTMENT OF UTILITIES

ANODE CABLE
IDENTIFICATION DETAIL

APPR'D BY: Mike O. Booth NO SCALE
DATE: MAY 2007 DWG. NO. **W-1015**

R:\Utilstds_New_Std_Details\Water_Utilities\W-1015