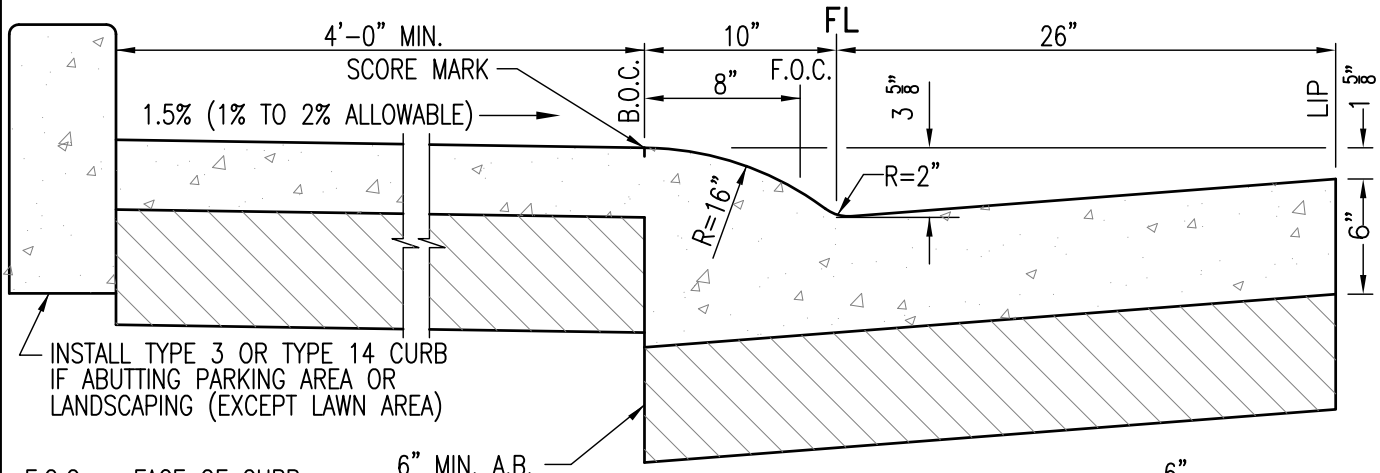

F.O.C. = FACE OF CURB
B.O.C. = BACK OF CURB

CURB & GUTTER TYPE 1

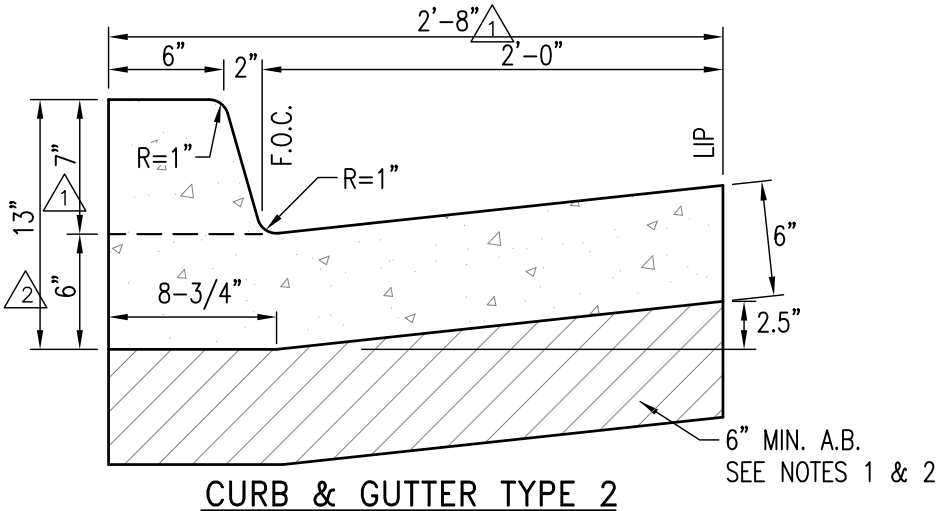

CURB & GUTTER TYPE 2

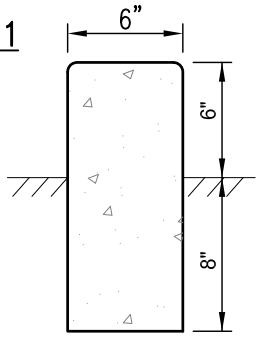

CURB TYPE 3 BARRIER CURB PLANTER AREA

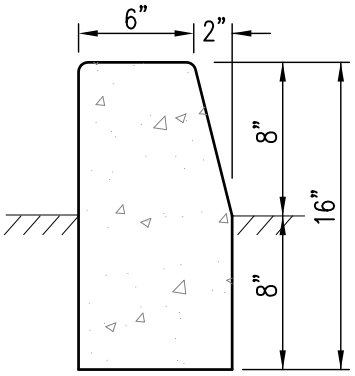

MEDIAN CURB TYPE 14 NONLANDSCAPED OR HARDSCAPED AREA

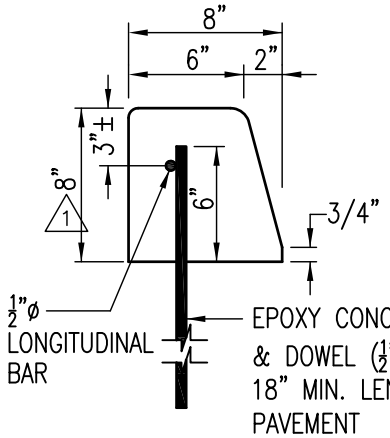

CURB TYPE 4 2

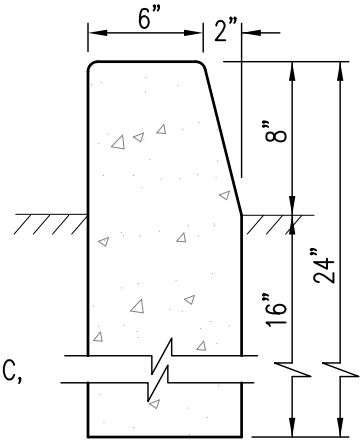

MEDIAN CURB TYPE 14A LANDSCAPED AREA

NOTES:

1. 12" MIN. A.B. SHALL BE PLACED IF SUBGRADE IS EXPANSIVE CLAY (R-VALUE LESS THAN 10).
2. TOP 6" OF SUBGRADE SHALL BE COMPACTED TO 95% MIN., UNLESS OTHERWISE APPROVED
3. 1/2" RADIUS ON EXPOSED EDGES.
4. ALL CONCRETE SHALL BE CLASS B.
5. ALL CONSTRUCTION & MATERIALS IN CONFORMANCE WITH SECTION 24 OF STD. SPECIFICATIONS.

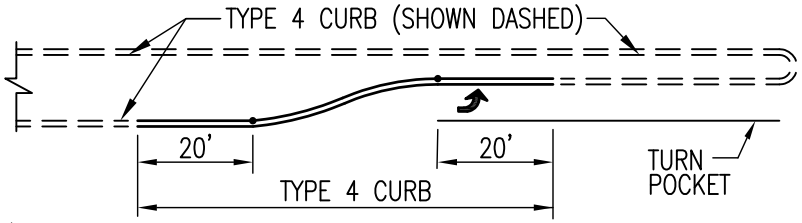

2 PLAN FOR TYP. PLACEMENT OF TYPE 4 CURB

REV.	DATE	DESCRIPTION
1	08/06/10	Dimensions Changes
2	10/13/11	Dims & Curb Type4 Changes

CITY OF SACRAMENTO
DEPARTMENT OF UTILITIES

STANDARD CURB AND GUTTER DETAILS

APPR'D BY: Nicholas Hemstreet NO SCALE
DATE: MAY 2007 DWG. NO. T - 11

MODIFIED REINFORCED CURB AND GUTTER TYPE 2 AT BUS STOP LOCATION FOR 50 FEET ON EITHER SIDE OF THE CENTER OF THE BUS STOP OR AS DIRECTED BY THE ENGINEER.

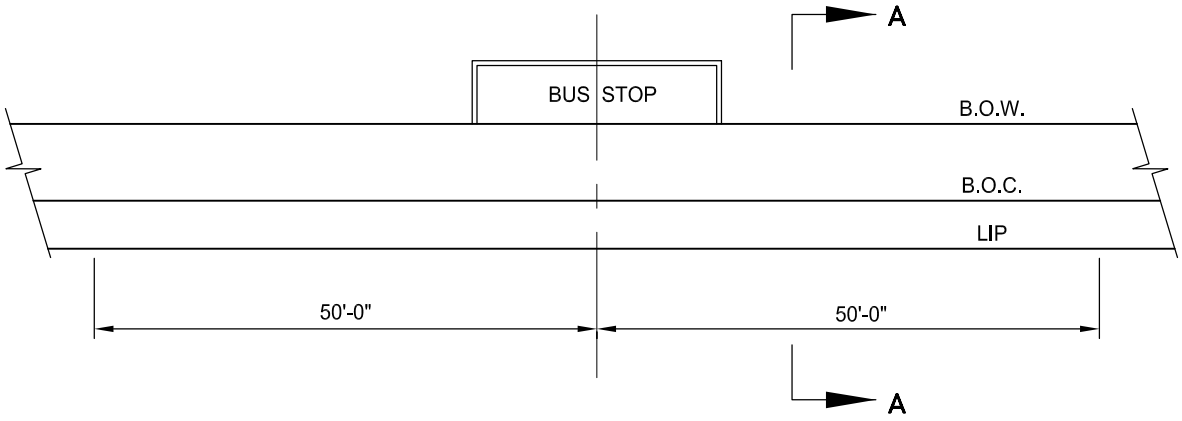

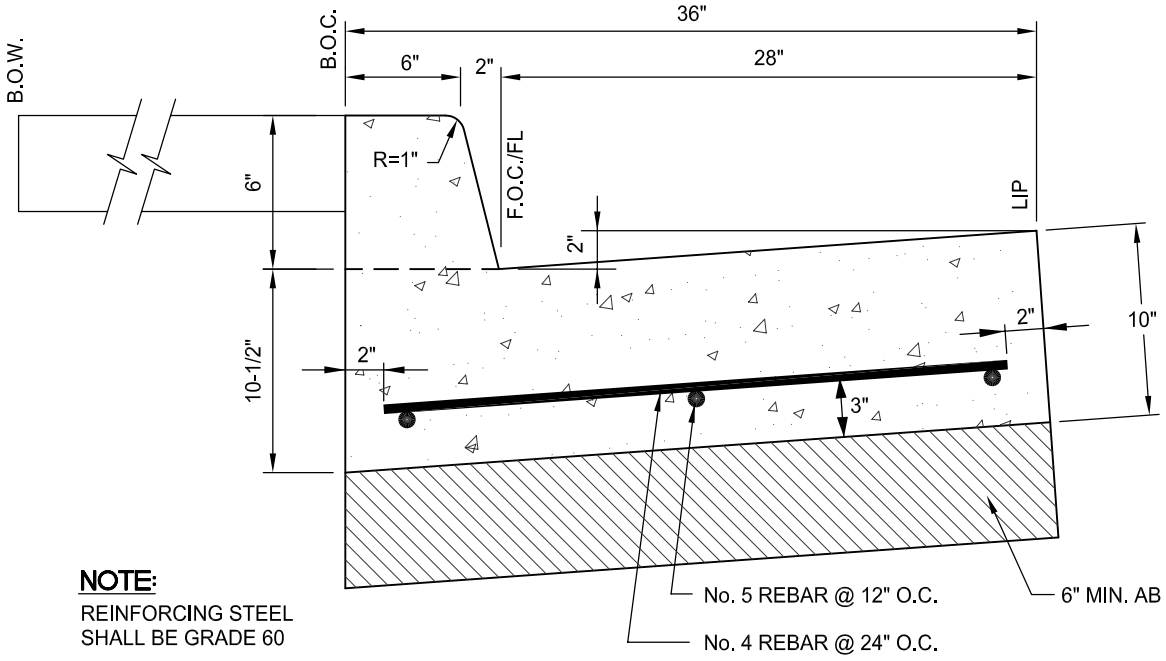

NOTE:
REINFORCING STEEL SHALL BE GRADE 60

SECTION A-A

REV.	DATE	DESCRIPTION

CITY OF SACRAMENTO
DEPARTMENT OF TRANSPORTATION

BUS STOP REINFORCED CURB & GUTTER DETAIL

APPR'D BY: Nicholas Thomas NO SCALE
DATE: MAY 2007 DWG. NO. T - 12

R: \Utilstds\City_Std_Details\DOT_Civil_Details\T-12

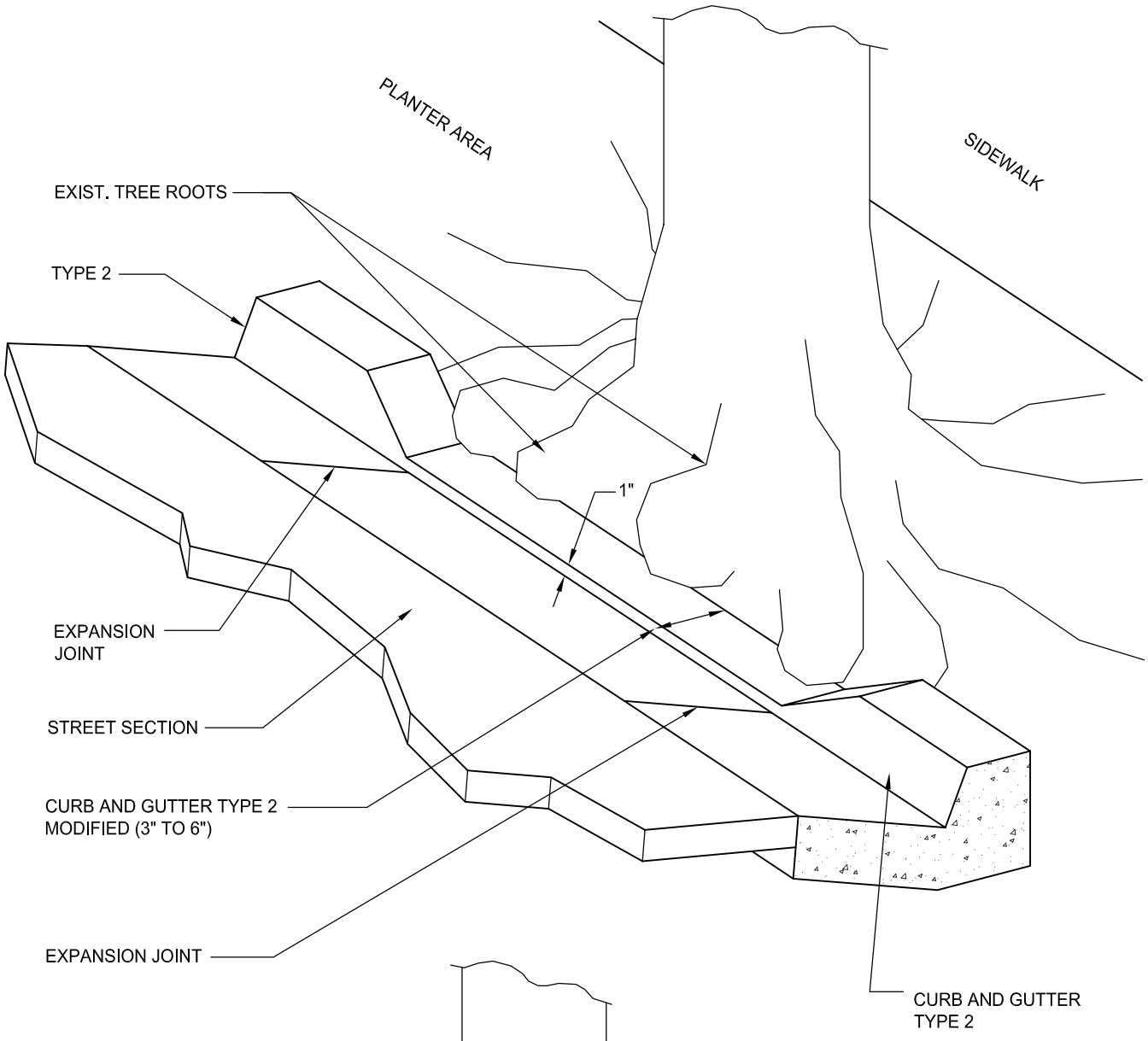

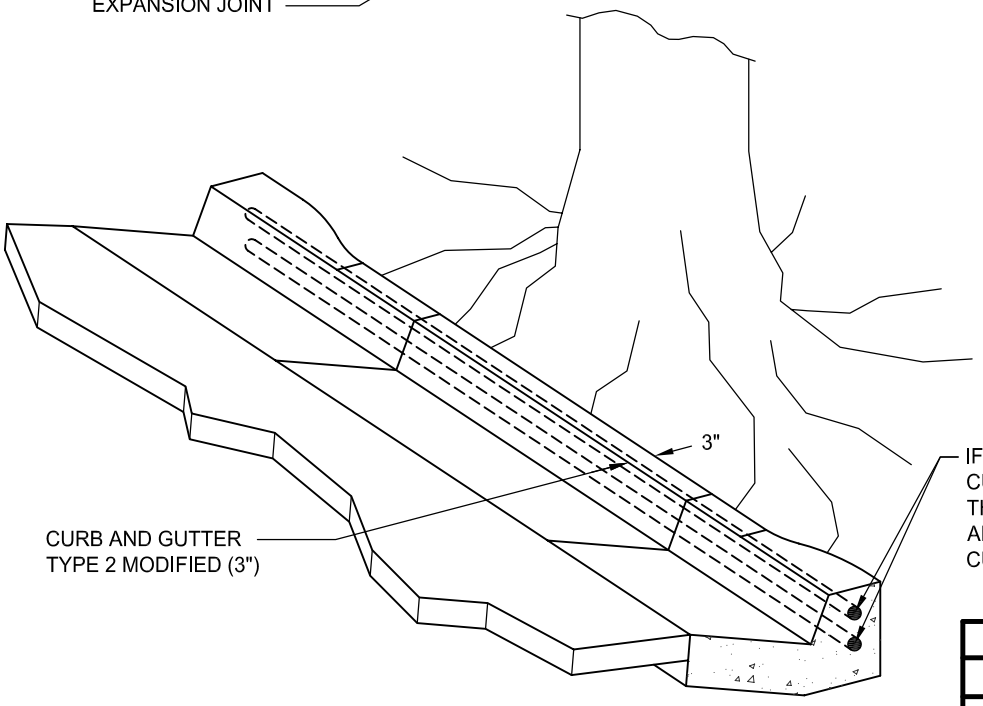

IF TREE ROOTS ARE NOT OVER THE CURB AND GUTTER, THEN NARROW THE THICKNESS OF CURB TO 3" AND PLACE 2-No.4 REBARS IN CURB IN FRONT OF THE TREE

REV.	DATE	DESCRIPTION

R:\Utilstds\City_Std_Details\DOT_Civil_Details\T-13

CITY OF SACRAMENTO
DEPARTMENT OF TRANSPORTATION

CURB & GUTTER NEAR TREE DETAILS

APPR'D BY: Nicholas Thomas NO SCALE

DATE: MAY 2007 DWG. NO. T - 13

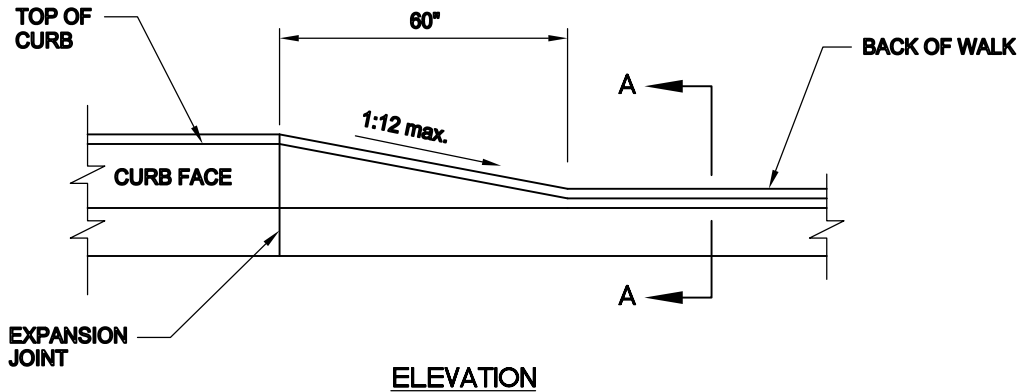

ELEVATION

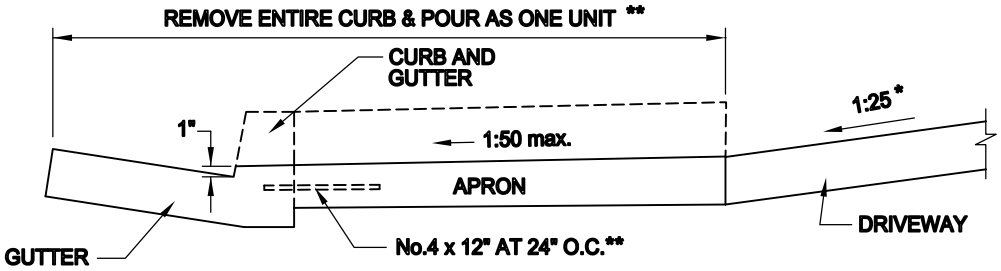

SECTION A-A

NOTES:

A. DRIVEWAY WIDTH AS PER SEC. 18 CITY CODE.

B. WEAKENED PLANE JOINTS (WPJ) REQUIRED ON CENTERLINE FOR DRIVEWAYS 10' TO 20' WIDE. DRIVEWAYS 22' TO 35' WIDE SHALL HAVE TWO WPJ EVENLY SPACED AT 1/3 AND 2/3 POINTS.

C. ALL CONSTRUCTION AND MATERIALS IN CONFORMANCE WITH SECTION 24 OF STANDARD SPECIFICATIONS.

D. THICKNESS OF APRONS SHALL BE 4" ON RESIDENTIAL DRIVEWAYS AND 6" ON COMMERCIAL DRIVEWAYS. ON COMMERCIAL DRIVEWAYS SIDEWALK SHALL BE REMOVED AND REPLACED WITH 6" OF CONCRETE.

E. APRON WILL BE DEPRESSED ON CURB AND GUTTER No.13 WHEN RECONSTRUCTING EXISTING COMMERCIAL DRIVEWAYS.

* ON RECONSTRUCTION PROJECTS THE SLOPE CAN BE 1:10.

** IF CURB & GUTTER ARE POURED SEPARETE OF APRON THEN DOWELS ARE REQUIRED AT BACK OF CURB. 3" IN CURB AND 9" IN CENTER OF APRON.

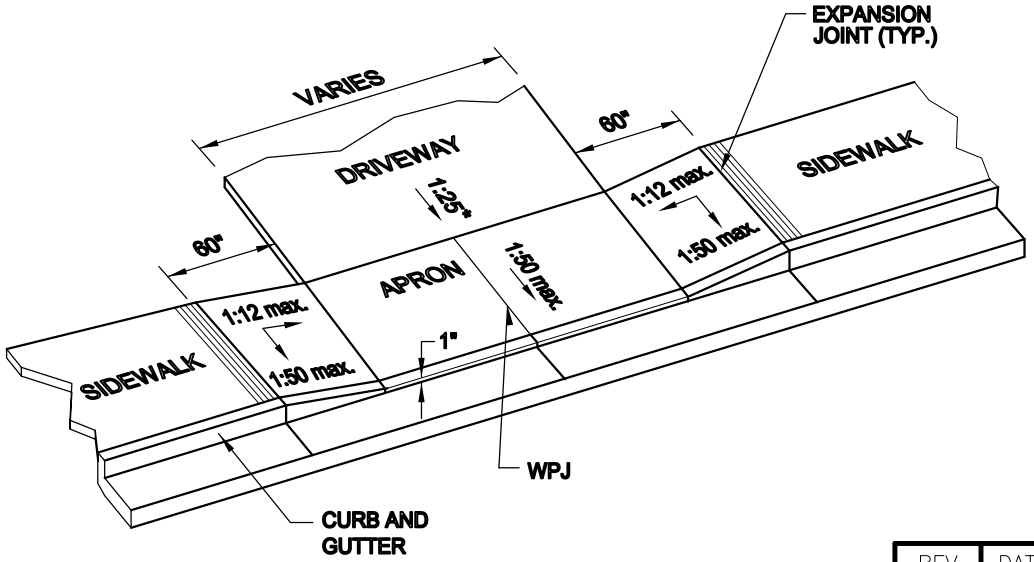

REV.	DATE	DESCRIPTION
1	01-06-09	Change to read SEC. 18

CITY OF SACRAMENTO
DEPARTMENT OF TRANSPORTATION

SIDEWALK DRIVEWAY DETAIL

APPR'D BY: Nicholas Thomas NO SCALE

DATE: MAY 2007 DWG. NO. T - 21

R: \Utilstds\City_Std_Details\DOT_Civil_Details\T-21

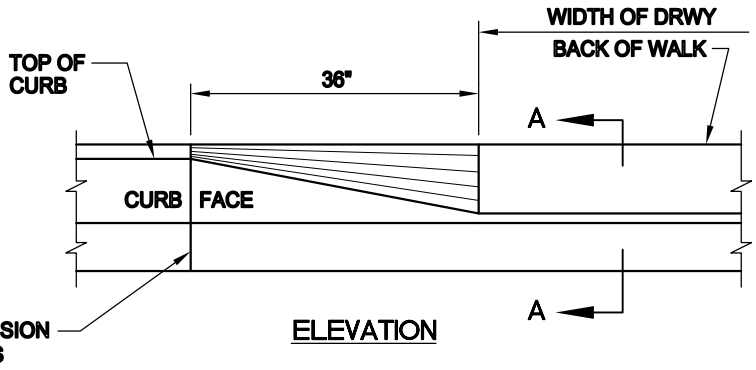

ELEVATION

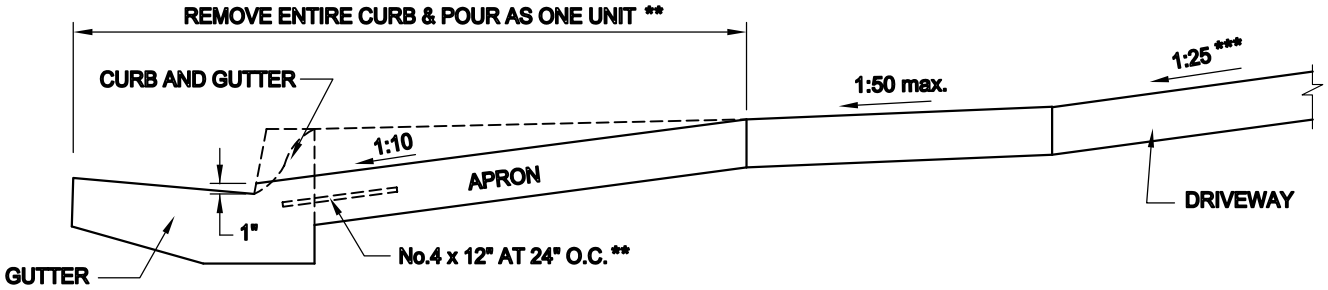

SECTION A-A WITH VERTICAL CURB

NOTES:

A. DRIVEWAY WIDTH AS PER SEC. 18 CITY CODE.

B. WEAKENED PLANE JOINTS (WPJ) REQUIRED ON CENTERLINE FOR DRIVEWAYS 10' TO 20' WIDE. DRIVEWAYS 22' TO 35' WIDE SHALL HAVE TWO WPJ EVENLY SPACED AT 1/3 AND 2/3 POINTS.

C. ALL CONSTRUCTION AND MATERIALS IN CONFORMANCE WITH SECTION 24 OF STANDARD SPECIFICATIONS.

D. THICKNESS OF APRONS SHALL BE 4" ON RESIDENTIAL DRIVEWAYS AND 6" ON COMMERCIAL DRIVEWAYS. ON COMMERCIAL DRIVEWAYS SIDEWALK SHALL BE REMOVED AND REPLACED WITH 6" OF CONCRETE.

* CONSTRUCTED IF REQUIRED BY EXISTING CONDITIONS.

** IF CURB AND GUTTER ARE POURED SEPARATE OF APRON THEN DOWELS ARE REQUIRED AT BACK OF CURB. 3" IN CURB AND 9" IN CENTER OF APRON.

*** ON RECONSTRUCTION PROJECTS THE SLOPE CAN BE 1:10.

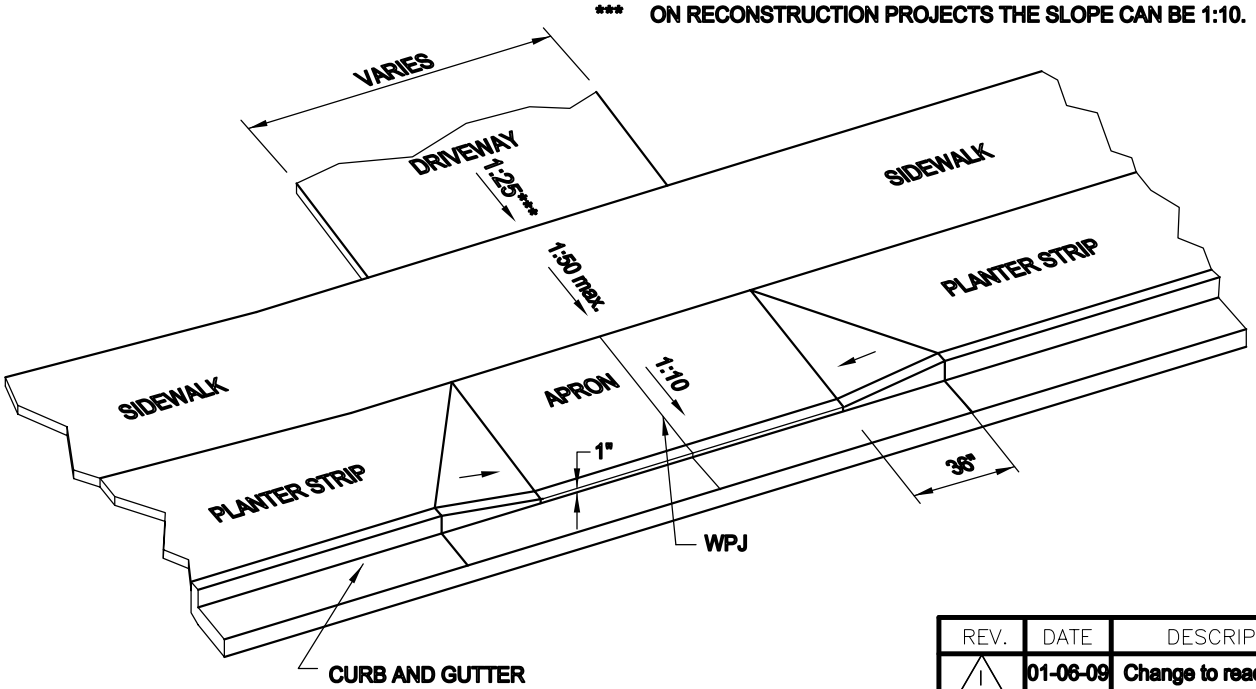

REV.	DATE	DESCRIPTION
1	01-06-09	Change to read SEC. 18

CITY OF SACRAMENTO
DEPARTMENT OF TRANSPORTATION

PLANTER STRIP
DRIVEWAY DETAIL

APPR'D BY: Nicholas Thomas NO SCALE
DATE: MAY 2007 DWG. NO. T - 22

R: \Utilstds\City_Std_Details\DOT_Civil_Details\T-22

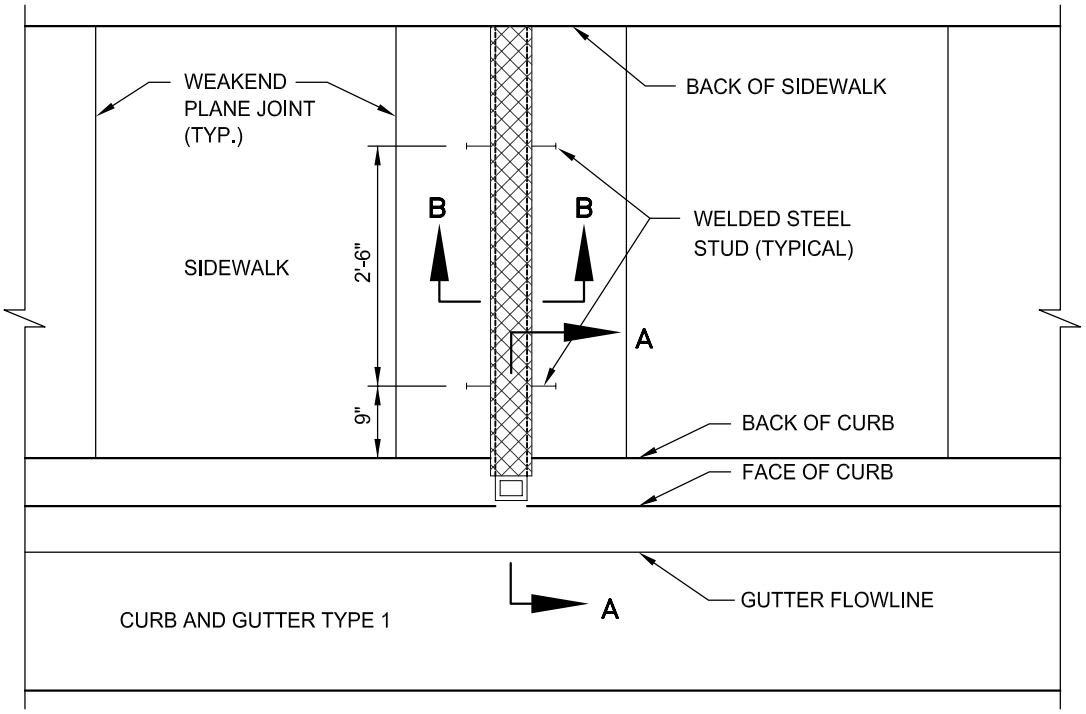

PLAN

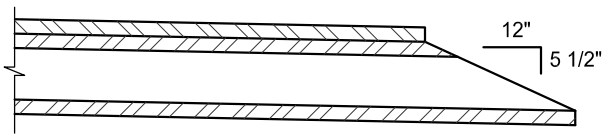

CURB END OF DRAIN

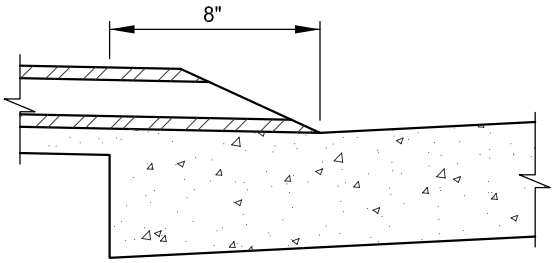

SECTION A-A

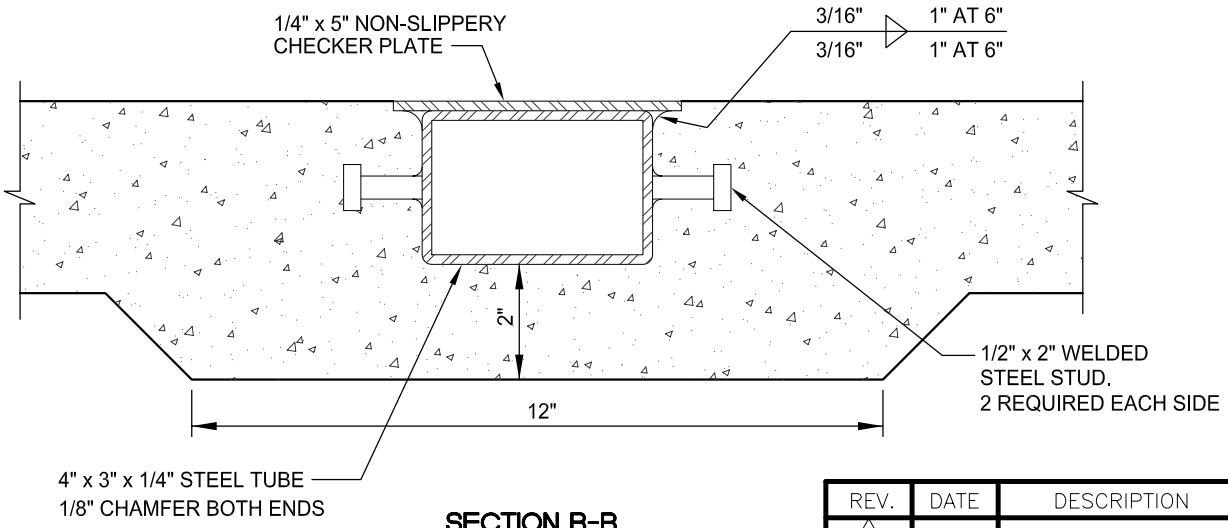

SECTION B-B

NOTE:
GALVANIZE AFTER FABRICATION AND ASSEMBLY

REV.	DATE	DESCRIPTION

CITY OF SACRAMENTO
DEPARTMENT OF TRANSPORTATION

THROUGH SDWK DRAIN
DETAIL (C&G TYPE 1)

APPR'D BY: Nicholas Thomas NO SCALE
DATE: MAY 2007 DWG. NO. T - 31

R: \Utilstds\City_Std_Details\DOT_Civil_Details\T-31

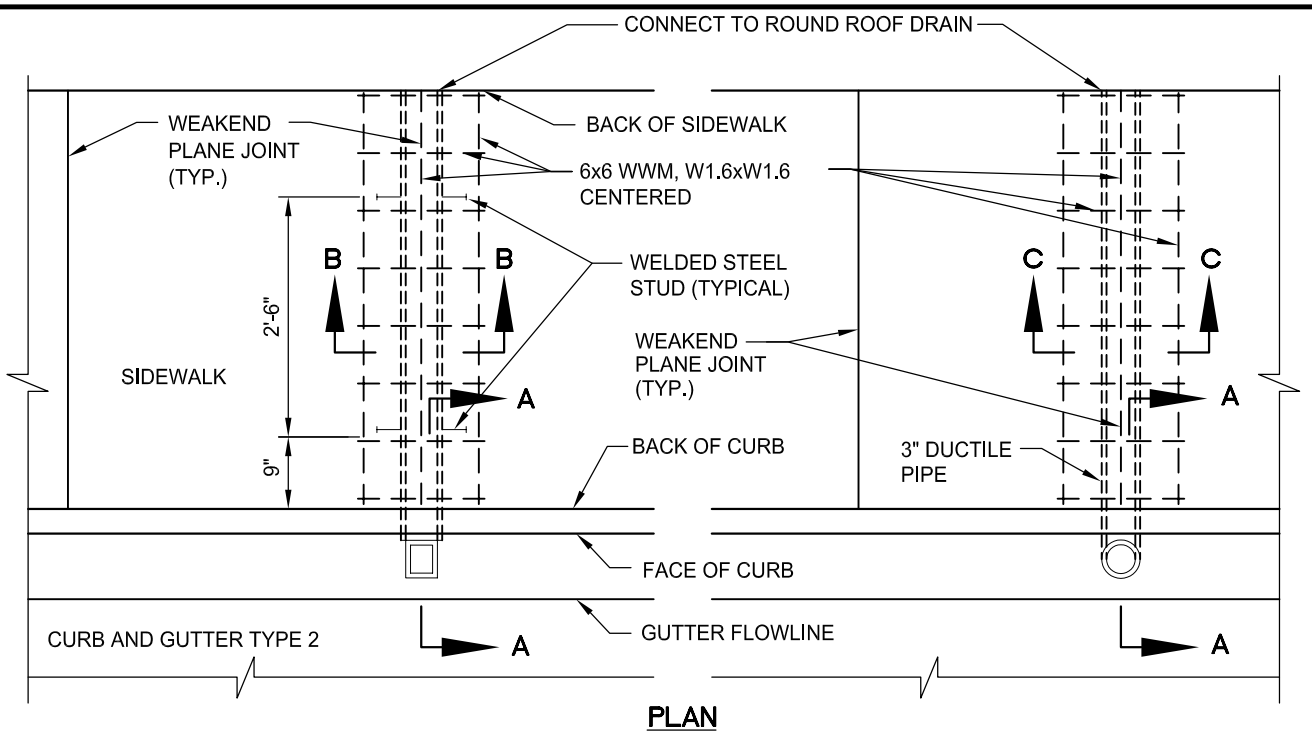

PLAN

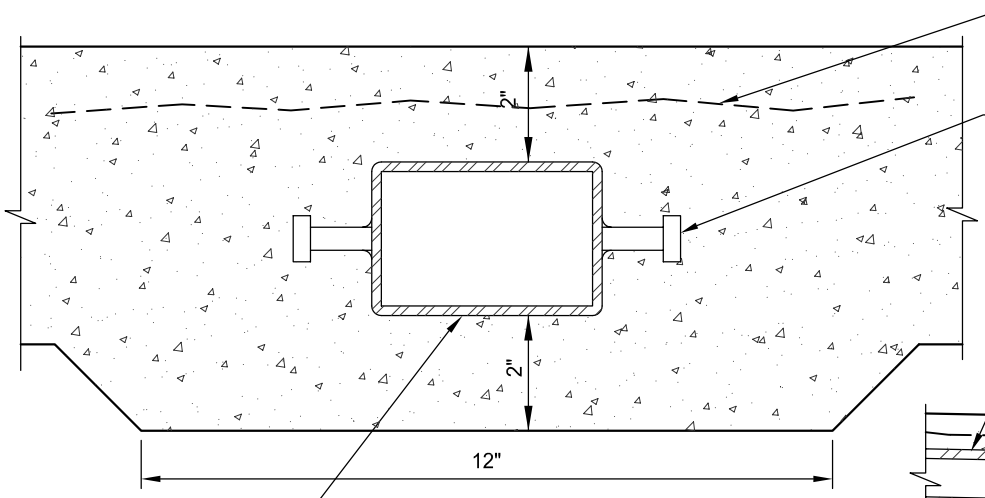

SECTION B-B

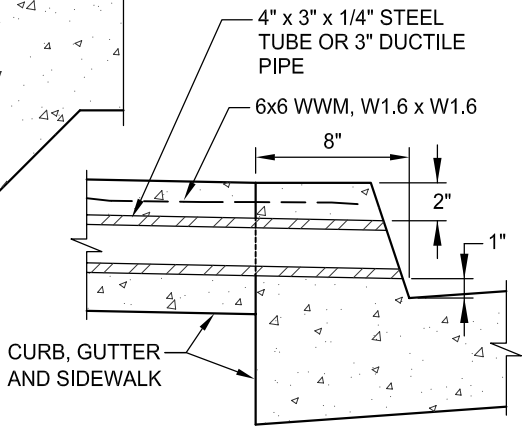

SECTION A-A

N.T.S.

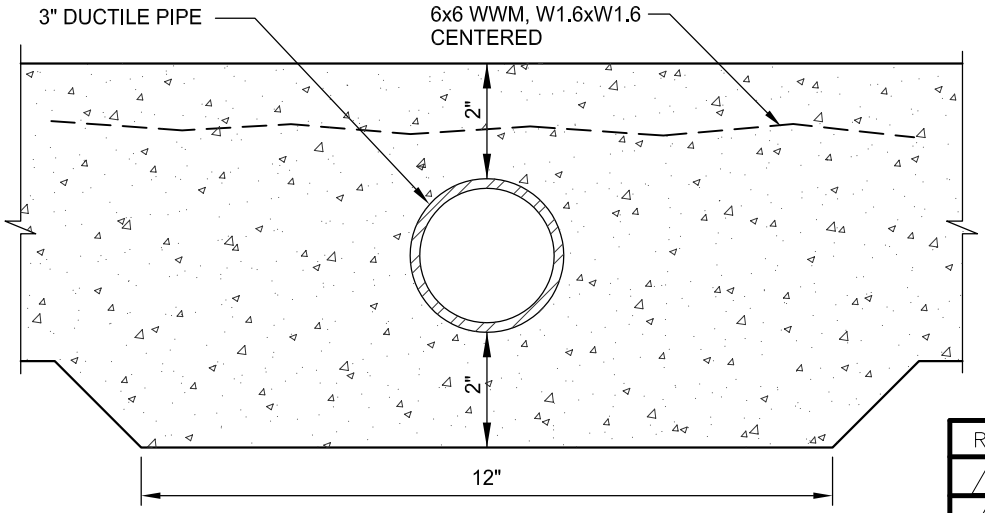

SECTION C-C

NOTE:

GALVANIZE AFTER FABRICATION AND ASSEMBLY

REV.	DATE	DESCRIPTION

R: \Utilstds\City_Std_Details\DOT_Civil_Details\T-32

CITY OF SACRAMENTO
DEPARTMENT OF TRANSPORTATION

THROUGH SDWK DRAIN DETAIL (C&G TYPE 2)

APPR'D BY: Nicholas Thomas NO SCALE

DATE: MAY 2007 DWG. NO. T - 32

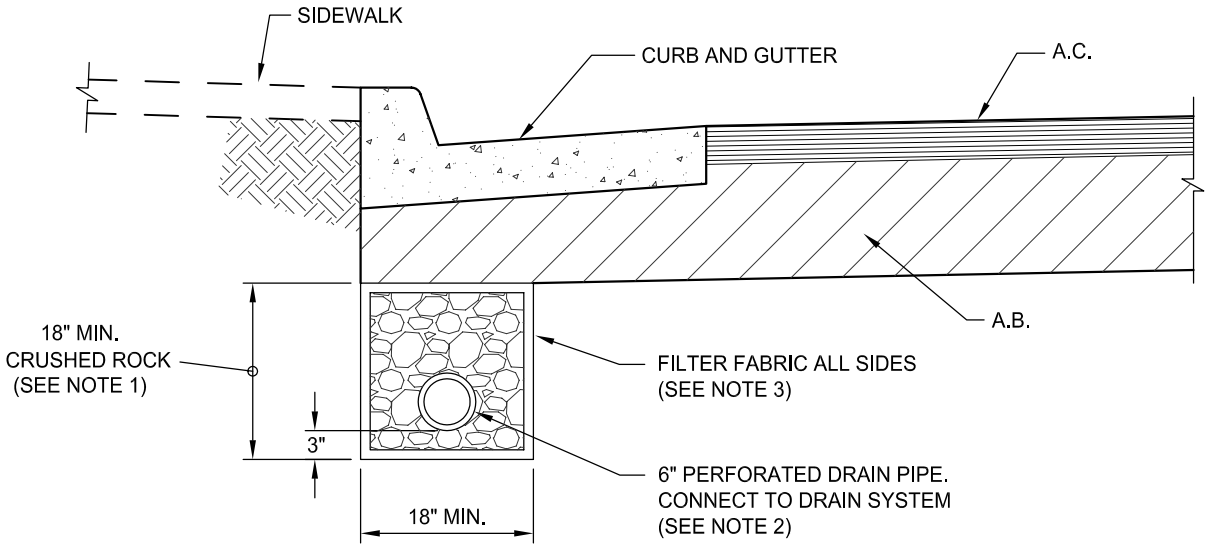

SPECIFICATIONS FOR THE SUBDRAIN TRENCH SYSTEM:

1. CRUSHED ROCK: CONTRACTOR SHALL PLACE CLEAN TYPE C CRUSHED ROCK CONFORMING TO SECTION 10-17 OF THE STANDARD SPECIFICATIONS.

2. PERFORATED DRAIN PIPE: PERFORATED PIPE SHALL BE POLYVINYL CHLORIDE (PVC) PIPE WITH PERFORATIONS THROUGHOUT THE LENGTH OF THE PIPE AND CONFORMIMG TO THE APPLICABLE PORTIONS OF AASHTO M252. ALTERNATIVELY, PIPE MAY BE PERFORATED CORRUGATED POLYETHYLENE TUBING CONFORMING TO THE APPLICABLE PORTIONS OF AASHTO M252 OR M294.

3. FILTER FABRIC: FILTER FABRIC SHALL CONFORM WITH SECTIONS 68-1.03, 88-1.01, AND 88-1.03 OF THE CALTRANS STANDARD SPECIFICATIONS.

R:\Utilstds\City_Std_Details\DOT_Civil_Details\T-40

REV.	DATE	DESCRIPTION

CITY OF SACRAMENTO DEPARTMENT OF TRANSPORTATION	SUBDRAIN TRENCH DETAIL	APPR'D BY: Nicholas Thomas NO SCALE DATE: MAY 2007 DWG. NO. **T - 40**

1) SIDEWALK TRANSITIONS

* LOCATED ABOVE RAMP OR LANDING
* 48" MINIMUM WIDTH
* 2% (1:50) MAXIMUM CROSS SLOPE AT RAMP OR LANDING
* 8.33% (1:12) MAXIMUM SLOPE

2) LANDINGS

* LOCATED ABOVE RAMP
* 48" MINIMUM DIMENSION IN ALL DIRECTIONS
* 2% (1:50) MAXIMUM CROSS SLOPE OR SLOPE IN ALL DIRECTIONS, INCLUDING DIAGONAL

3) RAMPS

* LOCATED ABOVE PAN OR BELOW LANDING
* 48" MINIMUM WIDTH
* 2% (1:50) MAXIMUM CROSS SLOPE
* 8.33 % (1:12) MAXIMUM SLOPE
* TRANSITION TO GUTTER SHALL BE FLUSH AND FREE OF ABRUPT CHANGES

4) PANS

* LOCATED BELOW RAMP
* 48" MINIMUM AT BACK OF PAN
* 48" MINIMUM FROM BACK OF PAN TO FLOW LINE
* 1% (1:100) MINIMUM SLOPE FROM BACK OF PAN TO FLOW LINE
* 2% (1:50) MAXIMUM CROSS SLOPE OR SLOPE IN ALL DIRECTIONS, INCLUDING DIAGONAL
* ON CORNERS, PAN BOUNDARIES ARE TO BE RADIAL
* TRANSITION TO GUTTER SHALL BE FLUSH AND FREE OF ABRUPT CHANGES

5) GUTTERS

* ADJACENT TO RAMP OR PAN
* 5% (1:20) MAXIMUM SLOPE MEASURED 4' FROM FOC OUT TO STREET PAVEMENT FOR FULL WIDTH OF RAMP.
* TRANSITION TO GUTTER SHALL BE FLUSH AND FREE OF ABRUPT CHANGES

6) FLARES

* LOCATED ADJACENT TO RAMP
* REQUIRED BETWEEN RAMPS WHERE THERE IS NO PLANTER AREA
* REQUIRED ON THE EXTERIOR OF RAMPS WHERE THERE IS AN ADJACENT CONCRETE SIDEWALK, REGARDLESS OF OBSTACLES
* GENERALLY TRIANGULAR IN NATURE
* 10% (1:10) MAXIMUM SLOPE

7) RETAINING CURBS

* REQUIRED ADJACENT TO SIDEWALK TRANSITIONS, LANDINGS, RAMPS AND PANS WHERE THE EXISTING LANDSCAPE (PLANTER AREA) IS 4" OR HIGHER AT ANY POINT ABOVE THE NEWLY CONSTRUCTED CURB RAMP ELEMENT
* REQUIRED FOR EXISTING PLANTER AREAS BETWEEN RAMPS
* RETAINING CURBS ARE TO HAVE A 6" WIDTH AND A VERTICAL FACE
* RETAINING CURB FOUNDATIONS ARE TO EXTEND 8" BELOW THE ADJACENT RAMP ELEMENT SURFACE
* OUTSIDE CORNERS OF RETAINING CURBS MUST HAVE A 6" RADIUS

8) 12" GROOVING DETAILS

* REQUIRED ADJACENT TO (ON FLAT AREAS ABOVE) RAMP AND FLARE
* REQUIRED TO BE PERPENDICULAR TO THE PATH OF TRAVEL

9) CONCRETE COLORING

* LAMP BLACK OR OTHER COLORING SHALL BE ADDED TO NEW CONCRETE AS NECESSARY TO MATCH EXISTING COLOR. THIS APPLIES TO ALL IN FILL LOCATIONS

* DUAL CURB RAMPS ARE REQUIRED UNLESS OTHERWISE APPROVED BY THE ENGINEER.
* ALL ELEMENTS, EXCEPT GUTTERS AND RETAINING CURBS, MUST BE CONSTRUCTED PLANAR IN NATURE WITH WEAKENED PLANE JOINTS SCORED BETWEEN EACH ELEMENT.
* WHEN FEASIBLE, OPPOSING CURB RAMPS SHALL ALIGN.
* THESE DEFINITIONS AND STANDARDS, GENERAL DETAILS, AND STANDARD DRAWINGS SHALL APPLY TO ALL CURB AND GUTTER TYPES.
* THERE ARE VARIATIONS AND ADJUSTMENTS THAT MAY BE REQUIRED UPON THE APPROVAL OF THE ENGINEER.
* THERE ARE NO VARIANCES TO THE MAXIMUM ALLOWABLE SLOPES AND CROSS SLOPES.

REV.	DATE	DESCRIPTION
1		
2		
3		

R:\Utilstds\City_Std_Details\DOT_Civil_Details\T-50

CITY OF SACRAMENTO
DEPARTMENT OF TRANSPORTATION

CURB RAMP ELEMENTS DEFINITIONS AND STANDARDS

APPR'D BY: Nicholas Thomas NO SCALE

DATE: MAY 2007 DWG. NO. T - 50

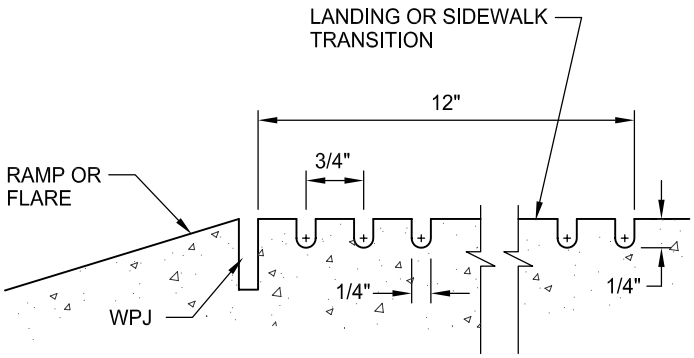

12" GROOVING DETAIL

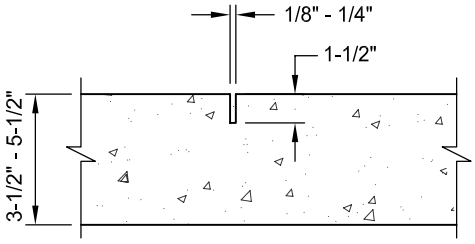

WEAKENED PLANE JOINT (WPJ)

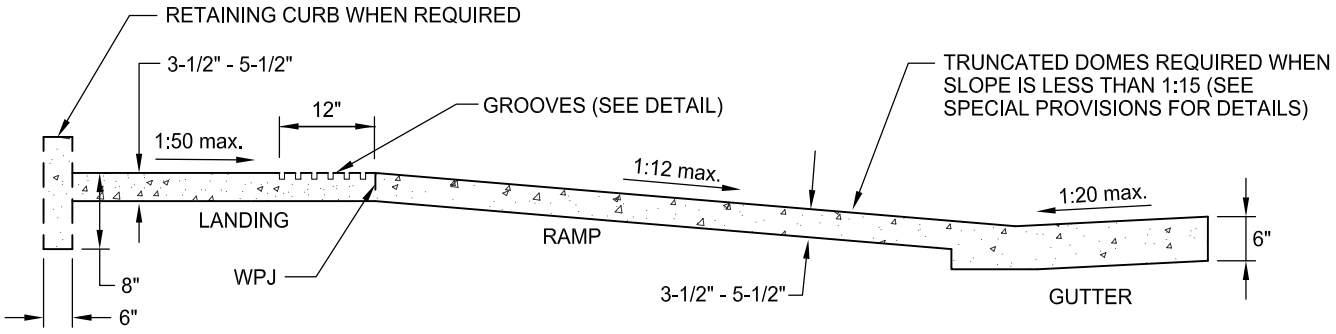

TYPICAL CROSS SECTION
FOR CENTER LINE OF FLARE, COMBO,
OR PLANTER STRIP CURB RAMP

NOTE:

ON RAMPS ADJACENT TO PANS TRUNCATED DOMES REQUIRED WHEN SLOPE IS LESS THAN 1:15 (SEE SPECIAL PROVISIONS FOR DETAILS)

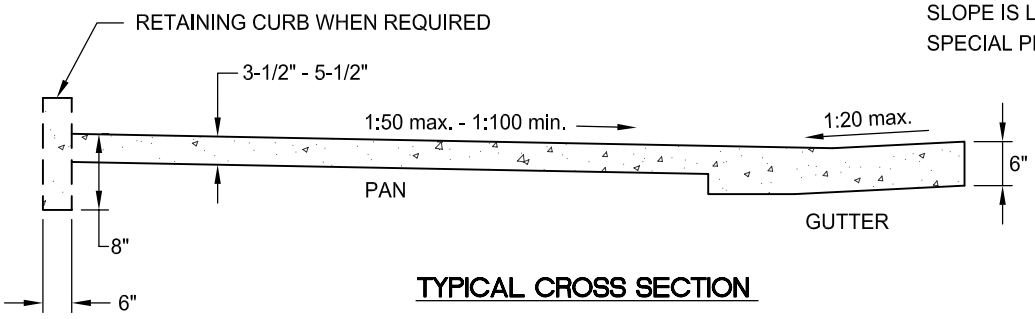

TYPICAL CROSS SECTION
FOR CENTER LINE OF
PAN CURB RAMP

NOTE:

SURFACE OF RAMPS AND PANS SHALL HAVE A TRANSVERSE BROOM SURFACE TEXTURE ROUGHER THAN ADJACENT SIDEWALK

REV.	DATE	DESCRIPTION

CITY OF SACRAMENTO DEPARTMENT OF TRANSPORTATION	CURB RAMP GENERAL DETAILS	APPR'D BY: Nicholas Thomas NO SCALE DATE: MAY 2007 DWG. NO. T - 60

R: \Utilstds\City_Std_Details\DOT_Civil_Details\T-60

NOTES:

A. ALL SLOPES SHOWN ARE MAXIMUMS.

B. ALL DIMENSIONS SHOWN ARE MINIMUMS.

C. ALL PANS MUST BE LOCATED INSIDE CROSSWALKS OR IN FRONT OF STOP BARS.

D. ALL JOINTS BETWEEN ELEMENTS ARE RADIAL.

E. SINGLE RAMPS CAN BE CONSTRUCTED ON A TANGENT.

* CONSTRUCTED IF REQUIRED BY EXISTING CONDITIONS.

** MINIMUM SLOPE OF 1% (1:100) FROM BACK OF PAN TO FLOW LINE.

— — — DESIGNATES IN PLAN VIEWS THAT ELEMENT MAY BE CONSTRUCTED.

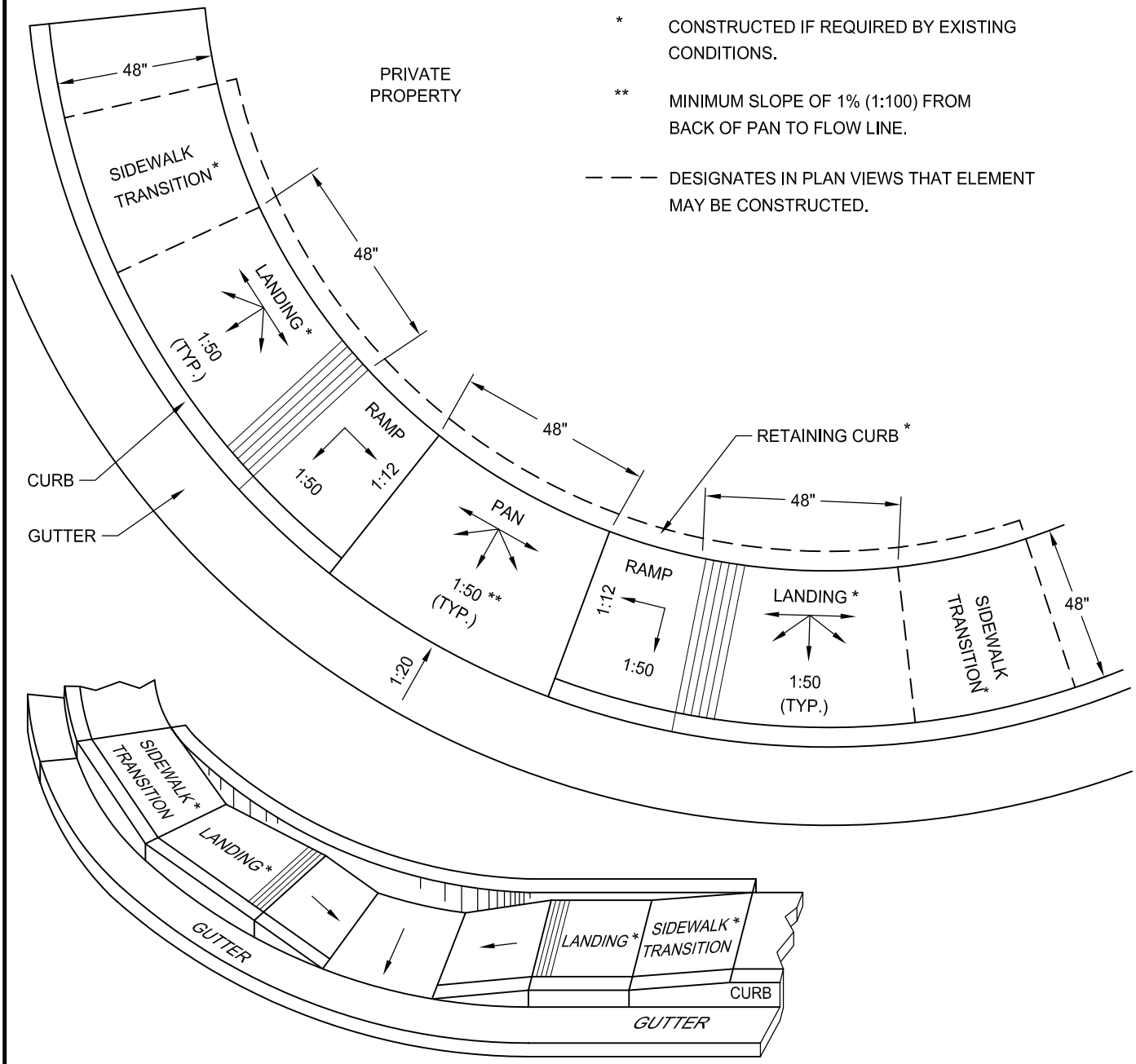

REV.	DATE	DESCRIPTION

CITY OF SACRAMENTO
DEPARTMENT OF TRANSPORTATION

SINGLE PAN CURB RAMPS

APPR'D BY: Nicholas Thomas NO SCALE

DATE: MAY 2007 DWG. NO. T - 71

R: \Utilstds\City_Std_Details\DOT_Civil_Details\T-71

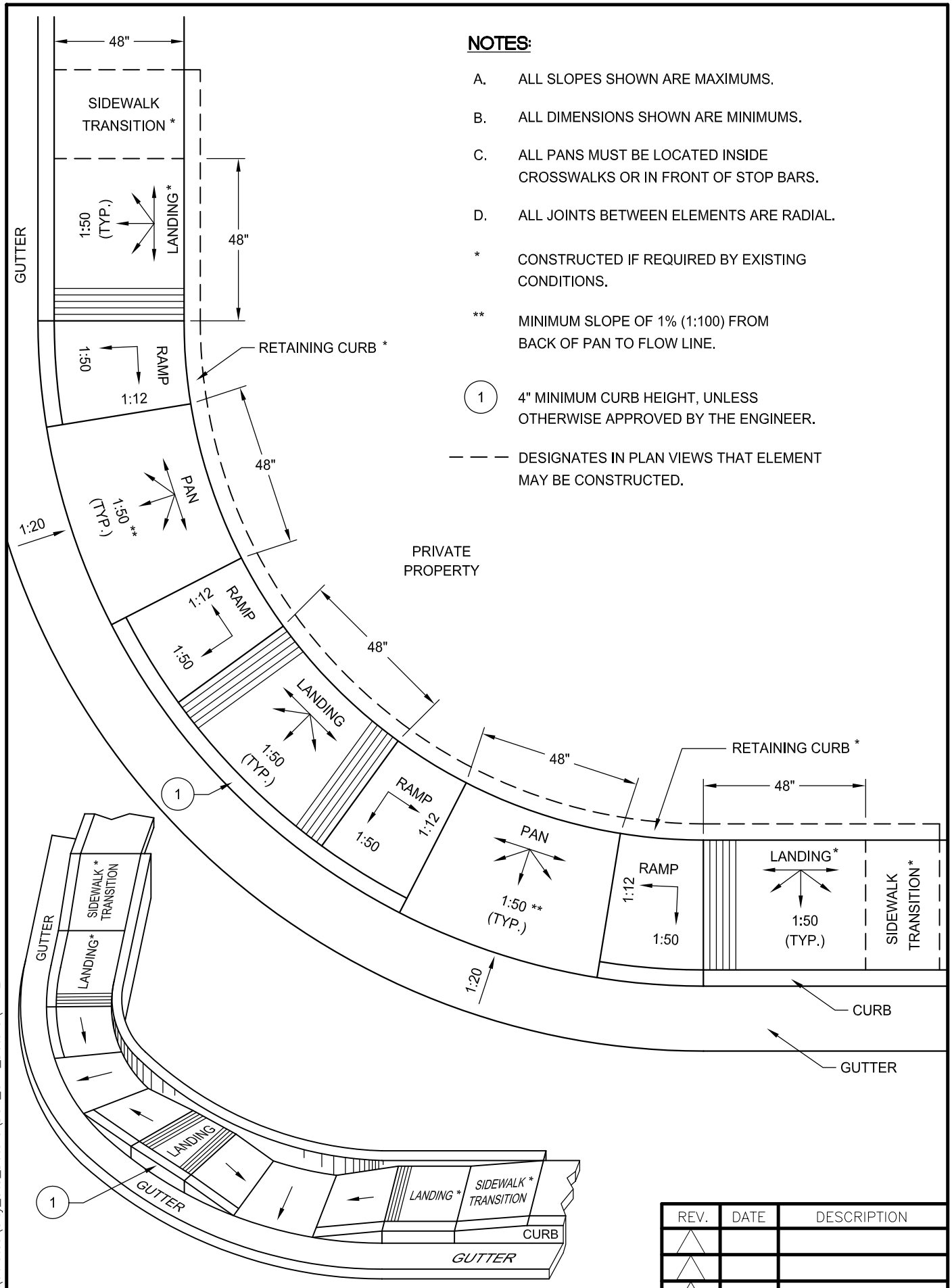

NOTES:

A. ALL SLOPES SHOWN ARE MAXIMUMS.

B. ALL DIMENSIONS SHOWN ARE MINIMUMS.

C. ALL PANS MUST BE LOCATED INSIDE CROSSWALKS OR IN FRONT OF STOP BARS.

D. ALL JOINTS BETWEEN ELEMENTS ARE RADIAL.

* CONSTRUCTED IF REQUIRED BY EXISTING CONDITIONS.

** MINIMUM SLOPE OF 1% (1:100) FROM BACK OF PAN TO FLOW LINE.

(1) 4" MINIMUM CURB HEIGHT, UNLESS OTHERWISE APPROVED BY THE ENGINEER.

— — — DESIGNATES IN PLAN VIEWS THAT ELEMENT MAY BE CONSTRUCTED.

REV.	DATE	DESCRIPTION

CITY OF SACRAMENTO
DEPARTMENT OF TRANSPORTATION

DUAL PAN CURB RAMPS

APPR'D BY: Nicholas Thomas NO SCALE

DATE: MAY 2007 DWG. NO. T - 72

R:\Utilstds\City_Std_Details\DOT_Civil_Details\T-72

NOTES:

A. ALL SLOPES SHOWN ARE MAXIMUMS.

B. ALL DIMENSIONS SHOWN ARE MINIMUMS.

C. ALL RAMPS MUST BE LOCATED INSIDE CROSSWALKS OR IN FRONT OF STOP BARS.

D. ALL JOINTS BETWEEN ELEMENTS, EXCEPT BETWEEN RAMP AND FLARE, ARE RADIAL. RAMP WIDTH REMAINS CONSTANT.

E. SINGLE RAMPS CAN BE CONSTRUCTED ON A TANGENT.

* CONSTRUCTED IF REQUIRED BY EXISTING CONDITIONS.

— — — DESIGNATES IN PLAN VIEWS THAT ELEMENT MAY BE CONSTRUCTED.

(1) THE WIDTH OF RAMP SHALL BE SAME AS LANDING

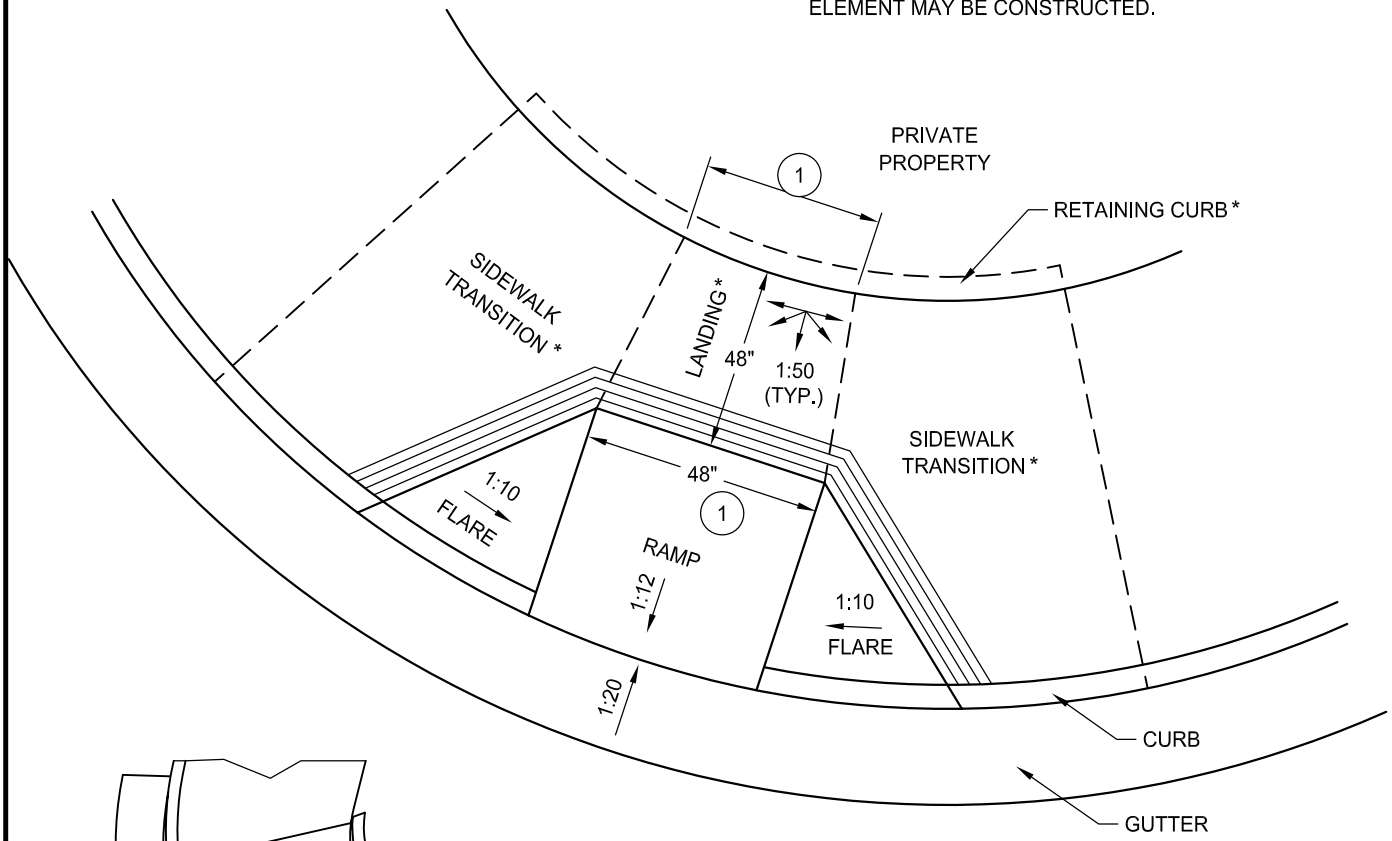

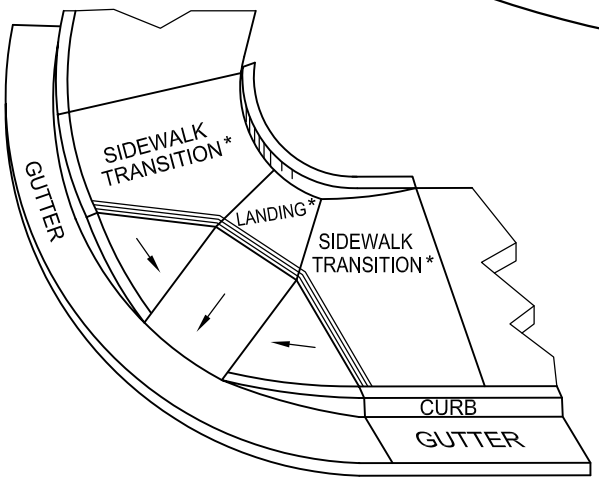

REV.	DATE	DESCRIPTION

CITY OF SACRAMENTO
DEPARTMENT OF TRANSPORTATION

SINGLE FLARE CURB RAMP

APPR'D BY: Nicholas Thomas NO SCALE

DATE: MAY 2007 DWG. NO. T - 73

R: \Utilstds \City_Std_Details \DOT_Civil_Details \T-73

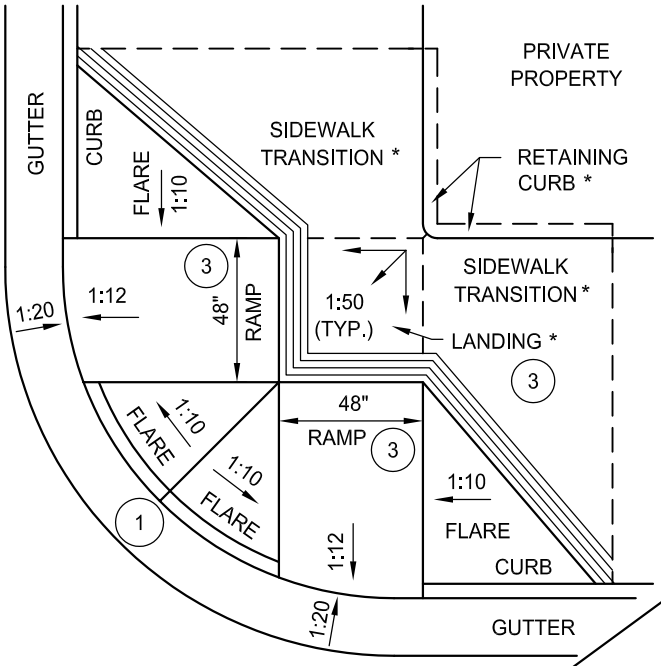

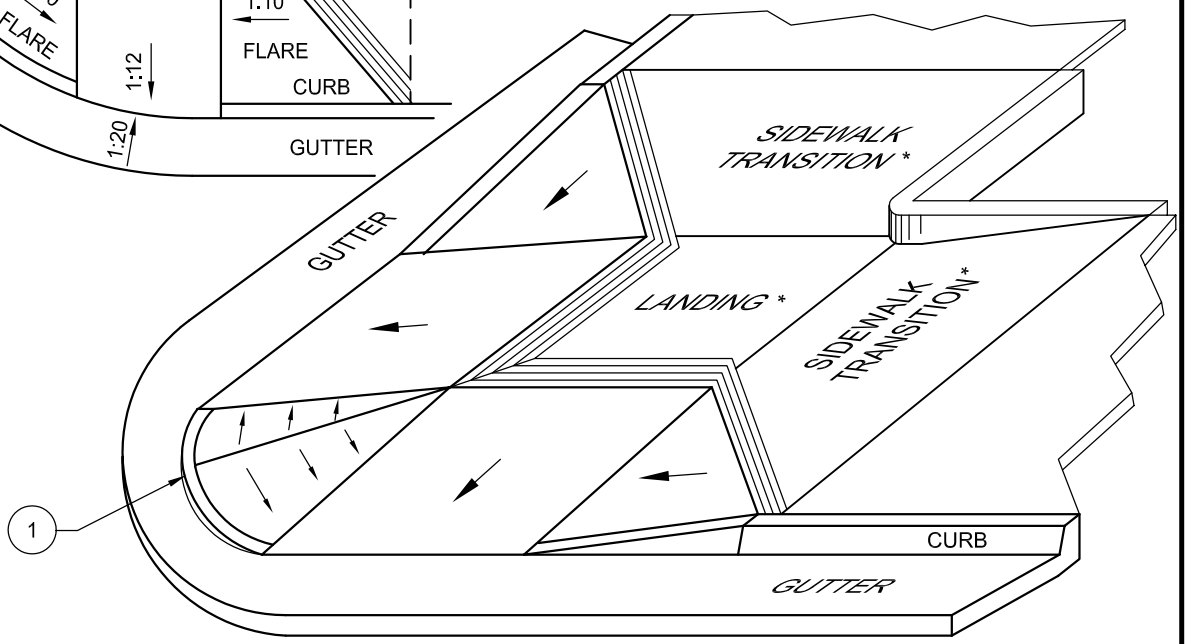

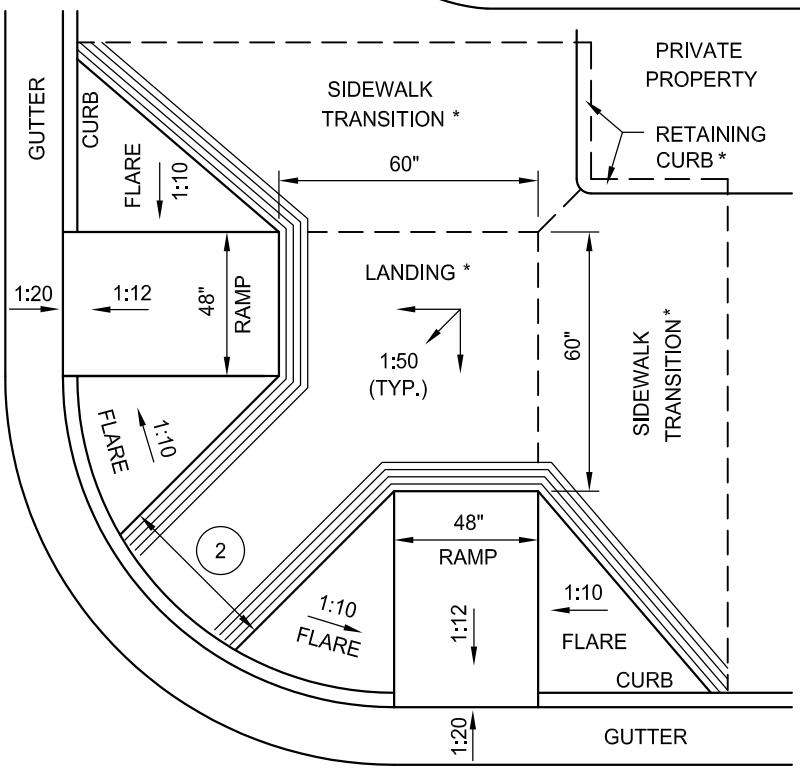

NOTES:

A. ALL SLOPES SHOWN ARE MAXIMUMS.

B. ALL DIMENSIONS SHOWN ARE MINIMUMS.

C. ALL RAMPS MUST BE LOCATED INSIDE CROSSWALKS OR IN FRONT OF STOP BARS.

* CONSTRUCTED IF REQUIRED BY EXISTING CONDITIONS.

— — — DESIGNATES IN PLAN VIEWS THAT ELEMENT MAY BE CONSTRUCTED.

NOTES:

(1) 4" MINIMUM CURB HEIGHT, UNLESS OTHERWISE APPROVED BY THE ENGINEER.

(2) NO MINIMUM DIMENSION. GROOVE PATTERNS OR FLARES CAN INTERSECT.

(3) IF LANDING CONSTRUCTED, 60" MIN. LANDING DIMENSIONS AND 60" MIN. WIDTH OF RAMP REQUIRED.

REV.	DATE	DESCRIPTION

R: \Utilstds \City_Std_Details \DOT_Civil_Details \T-74

CITY OF SACRAMENTO
DEPARTMENT OF TRANSPORTATION

DUAL FLARE CURB RAMPS

APPR'D BY: Nicholas Hernandez NO SCALE

DATE: MAY 2007 DWG. NO. T - 74

NOTES:

A. ALL SLOPES SHOWN ARE MAXIMUMS.

B. ALL DIMENSIONS SHOWN ARE MINIMUMS.

C. ALL RAMPS MUST BE LOCATED INSIDE CROSSWALKS OR IN FRONT OF STOP BARS.

D. ALL JOINTS BETWEEN ELEMENTS, EXCEPT BETWEEN RAMP AND FLARE, ARE RADIAL. RAMP WIDTH REMAINS CONSTANT.

E. SINGLE RAMPS CAN BE CONSTRUCTED ON A TANGENT.

* CONSTRUCTED IF REQUIRED BY EXISTING CONDITIONS.

— — — DESIGNATES IN PLAN VIEWS THAT ELEMENT MAY BE CONSTRUCTED.

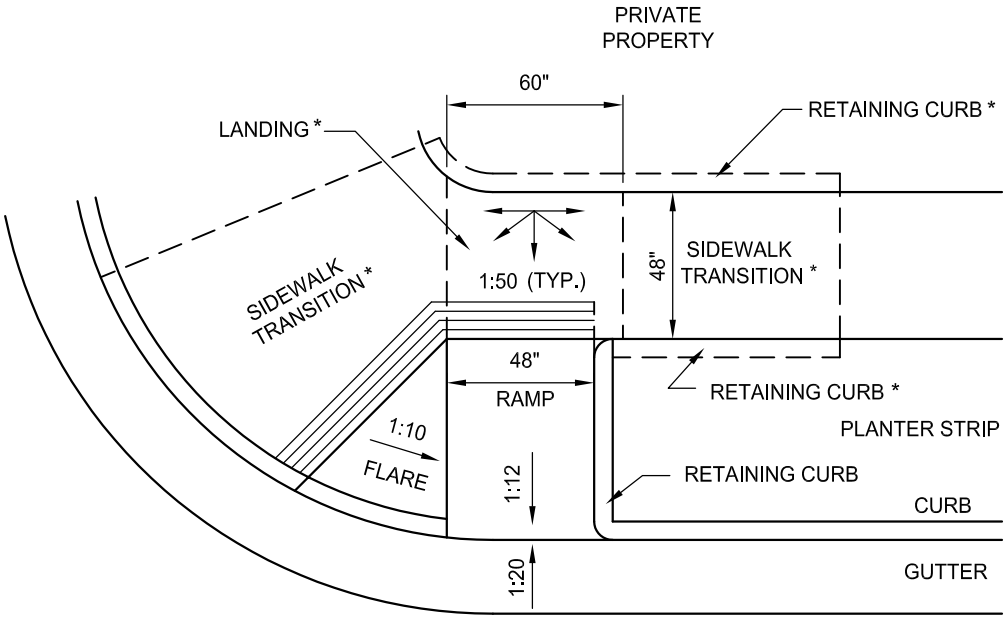

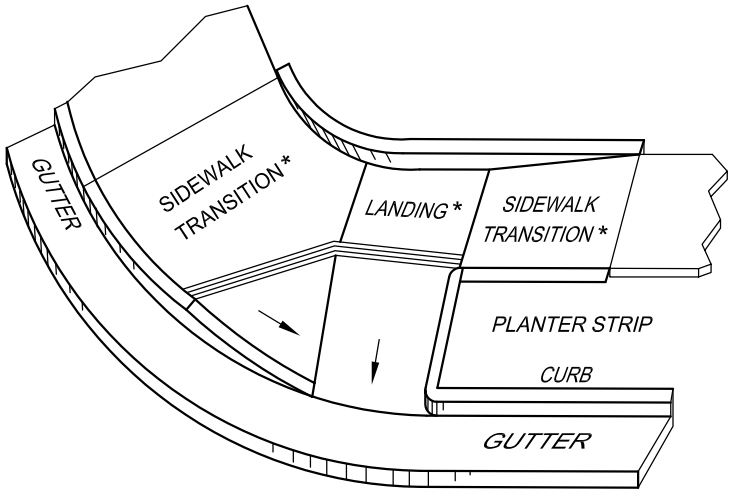

REV.	DATE	DESCRIPTION

CITY OF SACRAMENTO
DEPARTMENT OF TRANSPORTATION

SINGLE COMBINATION CURB RAMP

APPR'D BY: Nicholas Thomas NO SCALE

DATE: MAY 2007 DWG. NO. T - 75

R: \Utilstds\City_Std_Details\DOT_Civil_Details\T-75

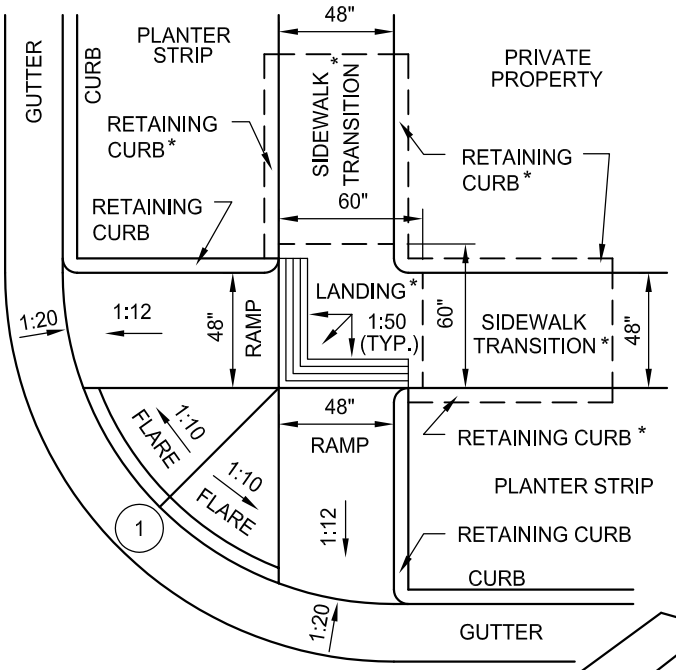

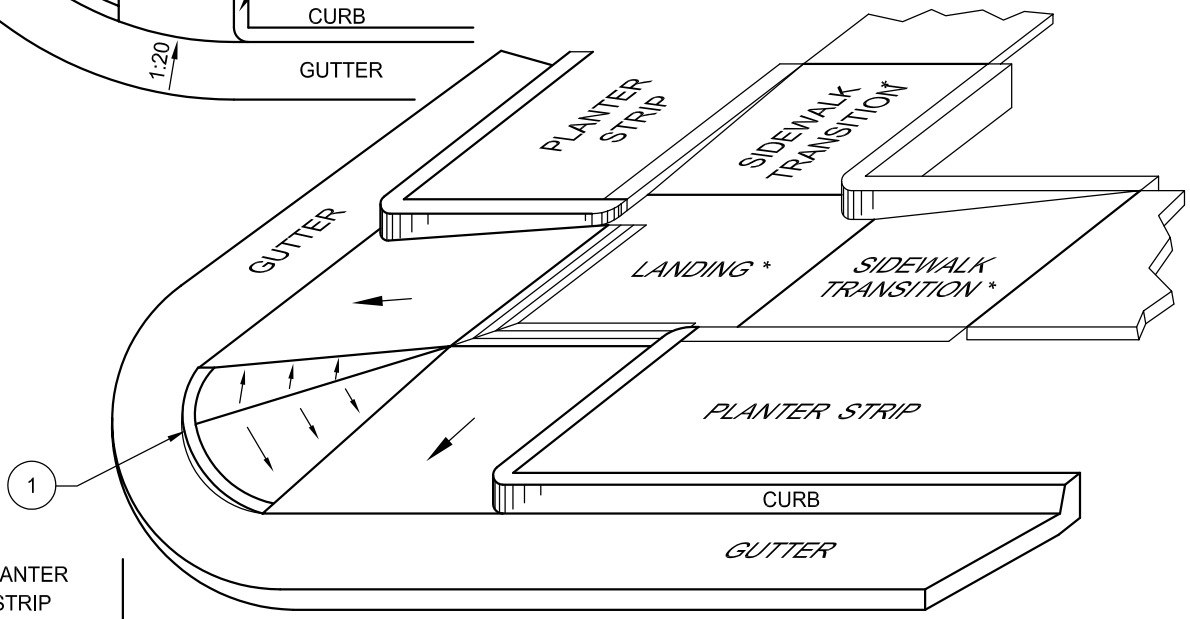

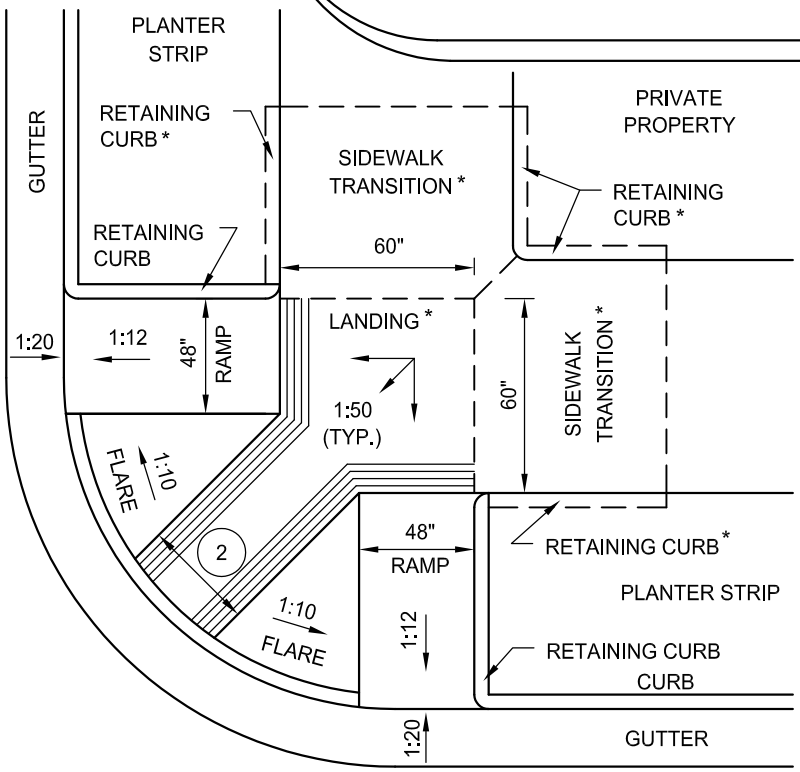

NOTES:

A. ALL SLOPES SHOWN ARE MAXIMUMS.

B. ALL DIMENSIONS SHOWN ARE MINIMUMS.

C. ALL RAMPS MUST BE LOCATED INSIDE CROSSWALKS OR IN FRONT OF STOP BARS.

* CONSTRUCTED IF REQUIRED BY EXISTING CONDITIONS.

— — — DESIGNATES IN PLAN VIEWS THAT ELEMENT MAY BE CONSTRUCTED.

NOTES:

(1) 4" MINIMUM CURB HEIGHT, UNLESS OTHERWISE APPROVED BY THE ENGINEER.

(2) NO MINIMUM DIMENSION. GROOVE PATTERNS OR FLARES CAN INTERSECT.

REV.	DATE	DESCRIPTION

R:\Utilstds\City_Std_Details\DOT_Civil_Details\T-76

CITY OF SACRAMENTO
DEPARTMENT OF TRANSPORTATION

DUAL COMBINATION CURB RAMPS

APPR'D BY: Nicholas Thomas NO SCALE

DATE: MAY 2007 DWG. NO. T - 76

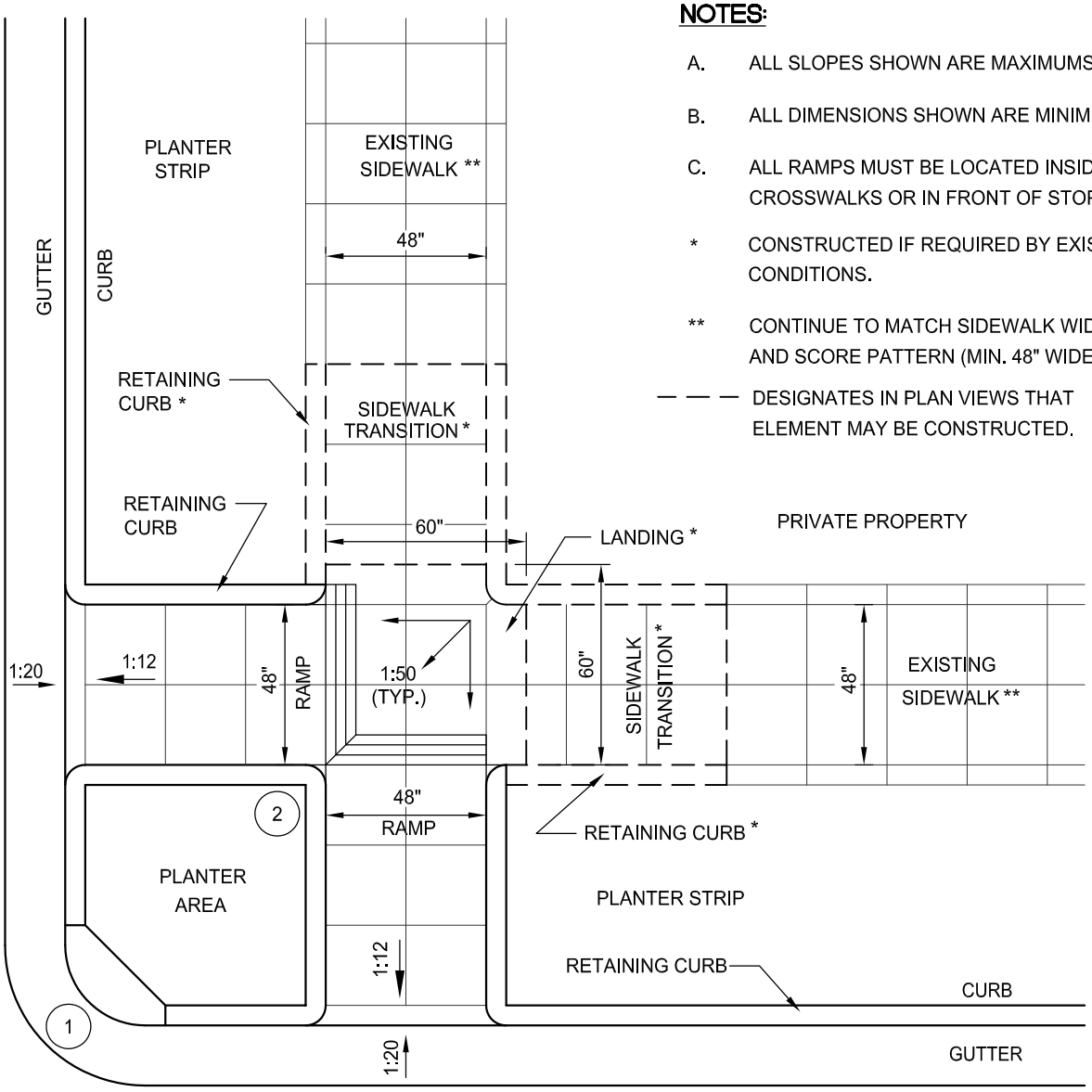

NOTES:

A. ALL SLOPES SHOWN ARE MAXIMUMS.

B. ALL DIMENSIONS SHOWN ARE MINIMUMS.

C. ALL RAMPS MUST BE LOCATED INSIDE CROSSWALKS OR IN FRONT OF STOP BARS.

* CONSTRUCTED IF REQUIRED BY EXISTING CONDITIONS.

** CONTINUE TO MATCH SIDEWALK WIDTH AND SCORE PATTERN (MIN. 48" WIDE).

— — — DESIGNATES IN PLAN VIEWS THAT ELEMENT MAY BE CONSTRUCTED.

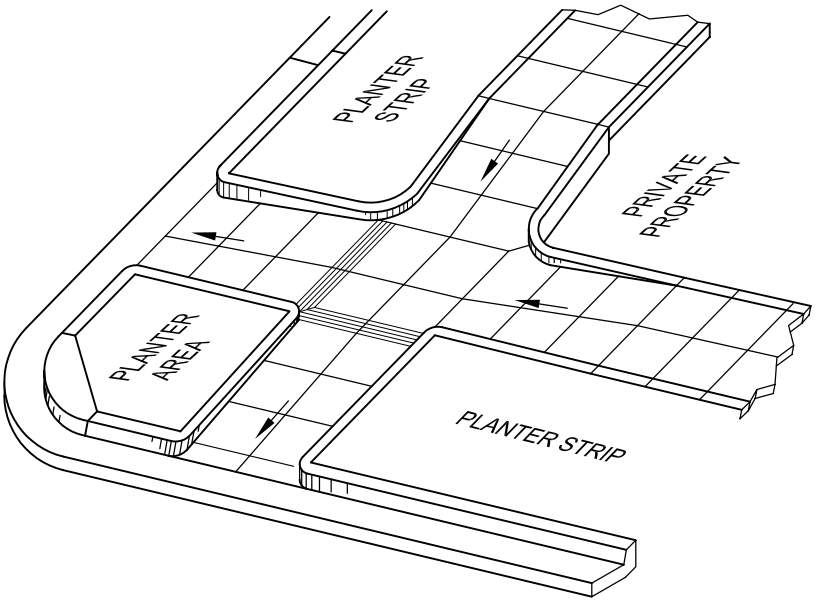

NOTES:

(1) STANDARD CURB HEIGHT TO MATCH EXISTING.

(2) TOP OF RETAINING CURB TO MATCH ADJACENT RETAINING CURB ELEVATIONS. CAN BE FLUSH WITH LANDING.

REV.	DATE	DESCRIPTION

CITY OF SACRAMENTO
DEPARTMENT OF TRANSPORTATION

PLANTER STRIP
CURB RAMPS

APPR'D BY: Nicholas Thomas NO SCALE

DATE: MAY 2007 DWG. NO. T - 77

R:\Utilstds\City_Std_Details\DOT_Civil_Details\T-77

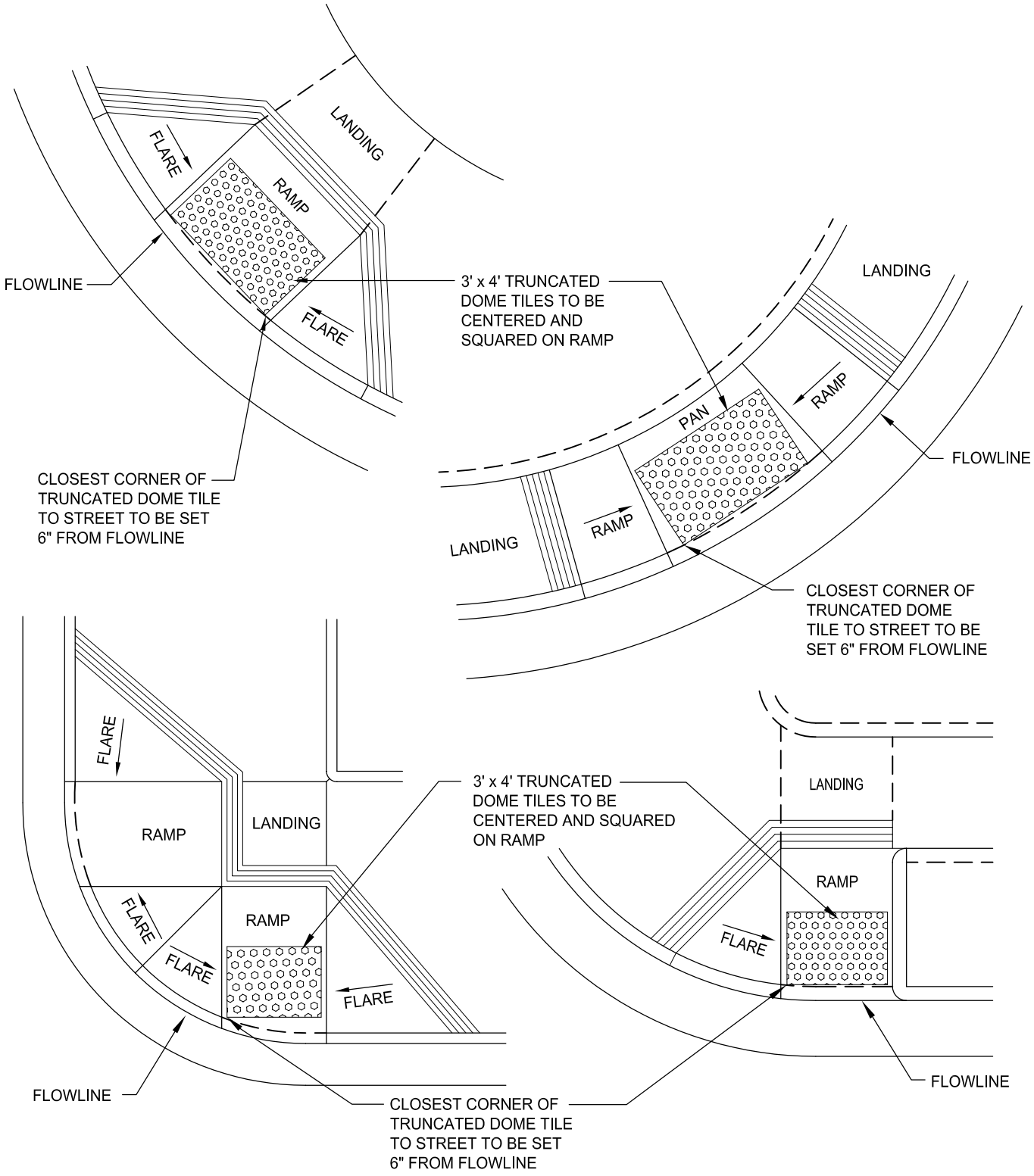

NOTES:

1. TRUNCATED DOMES REQUIRED IN PAN AT ALL LOCATIONS (FOR EXCEPTIONS SEE NOTE 2)
2. TRUNCATED DOMES REQUIRED ON RAMP WHEN SLOPE IS LESS THAN 1:15
3. 3' x 4' DIMENSION IS NOMINAL (SEE DWG CE. 3.1)

REV.	DATE	DESCRIPTION

CITY OF SACRAMENTO
DEPARTMENT OF TRANSPORTATION

TRUNCATED DOME STANDARD LAYOUT

APPR'D BY: Nicholas Thomas NO SCALE
DATE: MAY 2007 DWG. NO. T - 78

R: \Utilstds\City_Std_Details\DOT_Civil_Details\T-78

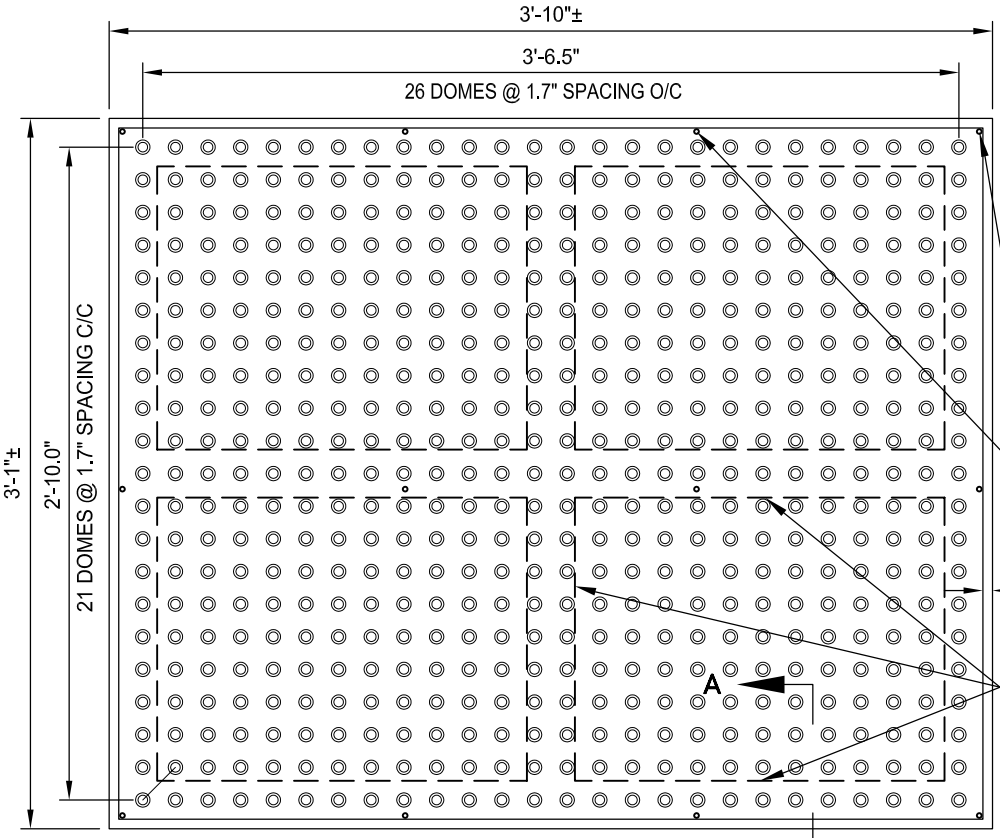

NOTE:

SURFACE MOUNTED TILE DETAILS SHOWN. DETAILS ARE APPLICABLE TO TILE SURFACE SECTION ONLY.
CAST-IN-PLACE TILE UNIT DESIGN AND DETAILS TO BE APPROVED BY THE ENGINEER.
TILE MATERIAL, FASTENERS, AND ADHESIVE TO BE APPROVED BY THE ENGINEER.

1/4" DIA. CTSK HOLES (TYP. 12 LOCATIONS)

0.5" (TYP. AROUND PERIMETER)

2.5" WIDE BOSS AT UNDERSIDE OF TILE FOR STRUCTURAL ADHESIVE AT FULL PERIMETER AND THROUGH CENTER TILE

PLAN - TILE
N.T.S.

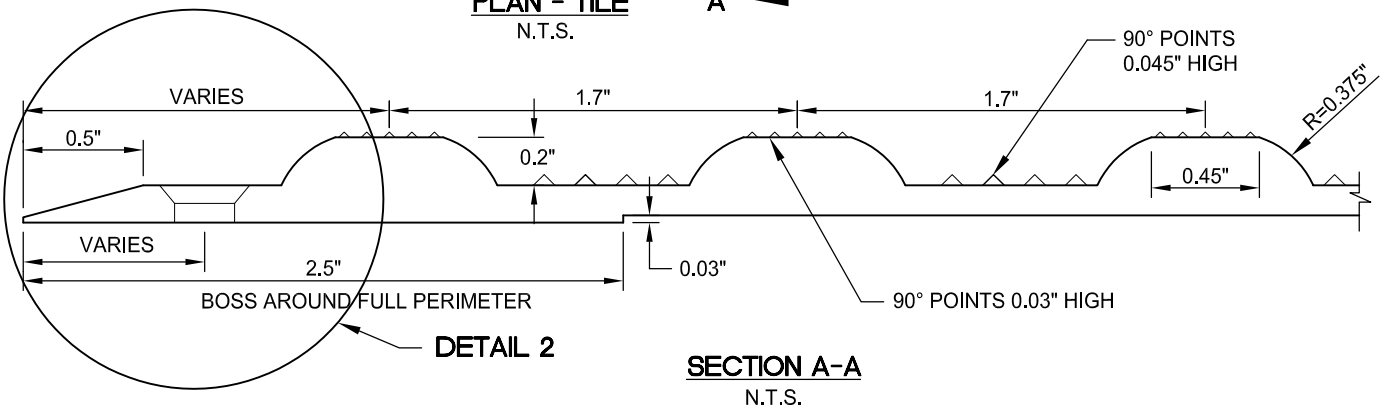

SECTION A-A
N.T.S.

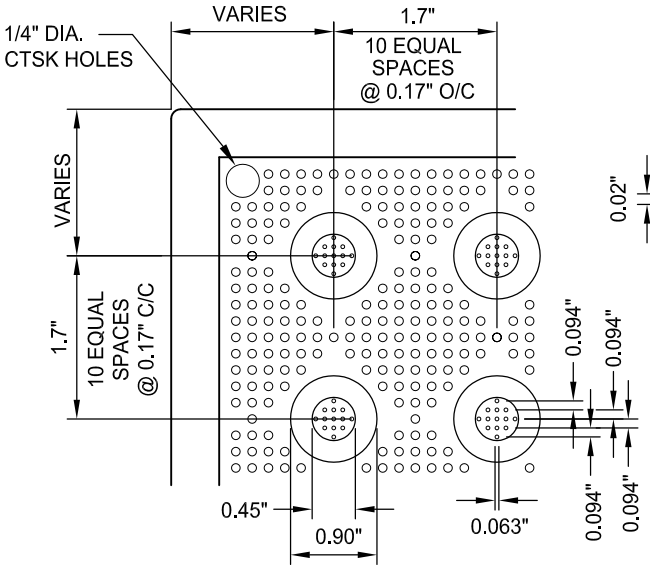

DETAIL 1

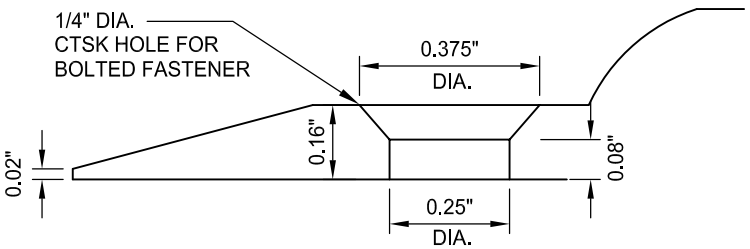

DETAIL 2

REV.	DATE	DESCRIPTION

R: \Utilstds\City_Std_Details\DOT_Civil_Details\T-79

CITY OF SACRAMENTO
DEPARTMENT OF TRANSPORTATION

TRUNCATED DOME DETAIL

APPR'D BY: Nicholas Thomas NO SCALE
DATE: MAY 2007 DWG. NO. T - 79

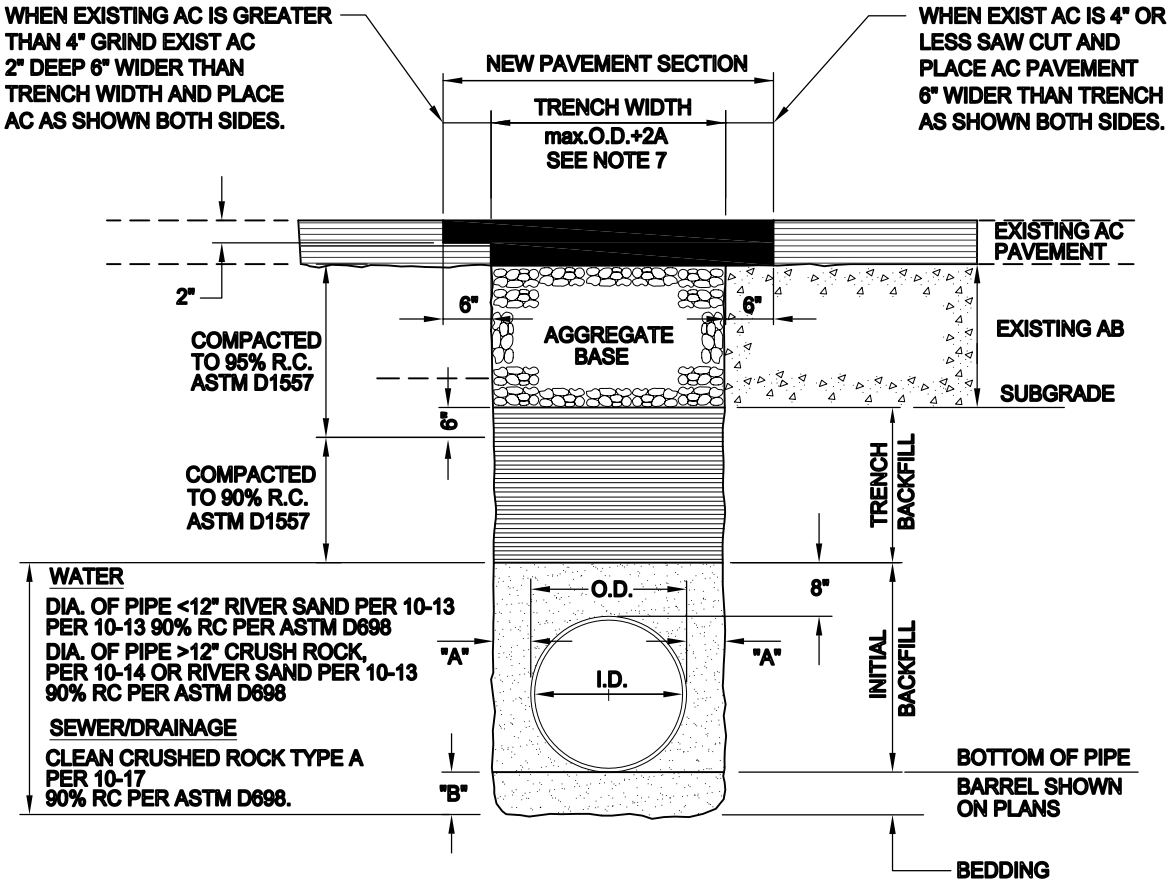

TYPICAL TRENCH SECTION

NOTES:

1. A TACK COAT OF ASPHALTIC EMULSION OR PAVING GRADE ASPHALT SHALL BE APPLIED TO EXISTING A.C. PAVEMENT AT ALL CONTACT SURFACES PRIOR TO PERMANENT A.C. PAVING PER SECTION 22-7 OF STANDARD SPECIFICATIONS.
2. UNLESS OTHERWISE SPECIFIED, PERMANENT PAVEMENT SHALL CONFORM IN QUALITY AND THICKNESS TO THE TYPE OF PAVEMENT REMOVED; BUT IN NO CASE SHALL BE LESS THAN FOUR INCHES (4") OF ASPHALTIC CONCRETE ON TWELVE INCHES (12") OF AGGREGATE BASE CLASS 2. △1
3. EXISTING PAVEMENT SHALL BE SAWCUT AND REMOVED IN SUCH A MANNER SO AS NOT TO TEAR, BULGE OR DISPLACE ADJACENT PAVEMENT. EDGES SHALL BE CLEAN AND VERTICAL WHEN PRACTICAL. ALL CUTS SHALL BE PARALLEL OR PERPENDICULAR TO STREET CENTERLINE.
4. ALL EXCAVATION AND BACKFILL SHALL CONFORM TO THE REQUIREMENTS OF THE STANDARD SPECIFICATIONS.
5. R.C. - RELATIVE COMPACTION AS DETERMINED BY ASTM DESIGNATION D 1557 OR 698.
6. UNLESS OTHERWISE INDICATED ON PLANS OR IN PERMIT OR SPECIAL PROVISIONS.
7. NO SOLID BLOCKING PERMISSIBLE BENEATH PIPE.
8. JETTING BACKFILL IS NOT PERMITTED.

TABLE T-12

DIMENSION NAME	PIPE DIAMETER (INCHES)	DIMENSION (INCHES)
A (MIN. TRENCH CLEARENCE)	≤12 >12	8 10
B (MIN. BEDDING BELOW PIPE)	≤12 >12	3 6

REV.	DATE	DESCRIPTION
△1	01-06-09	Change to read (12")

CITY OF SACRAMENTO
DEPARTMENT OF TRANSPORTATION

BACKFILL AND RESURFACING IN PAVED AREAS

APPR'D BY: Nicholas Hernandez NO SCALE
DATE: MAY 2007 DWG. NO. T - 80

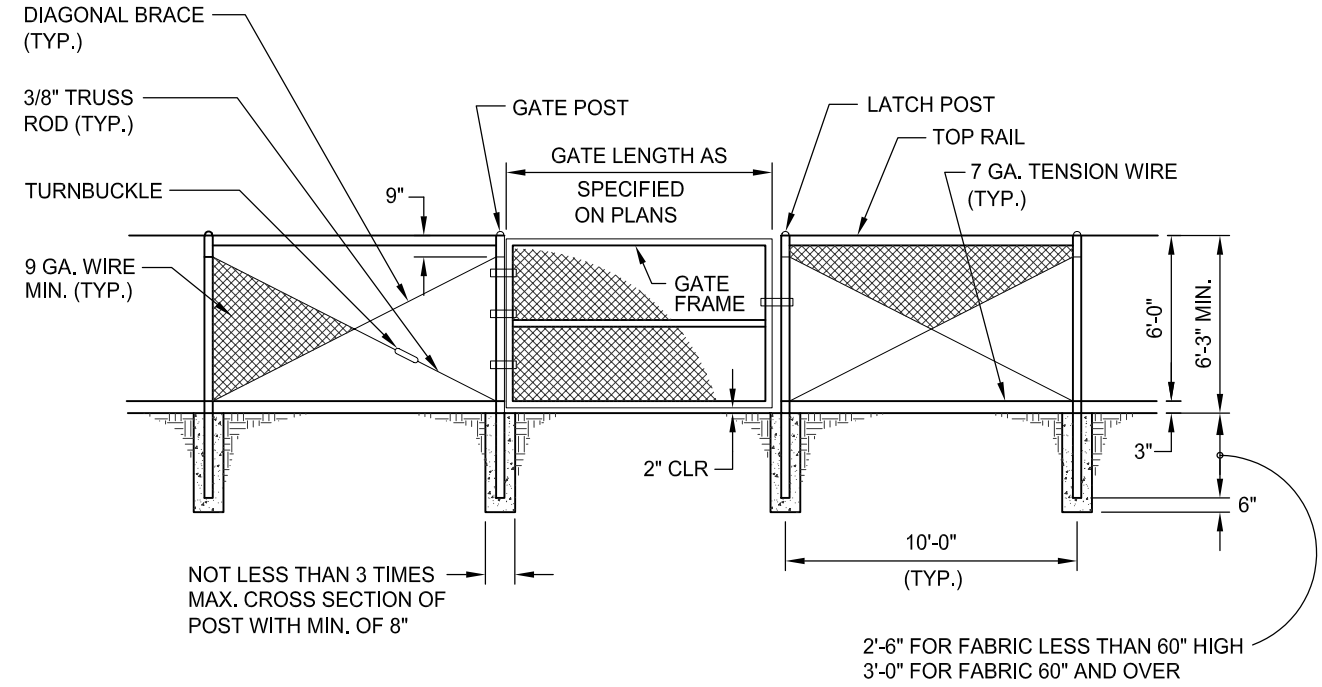

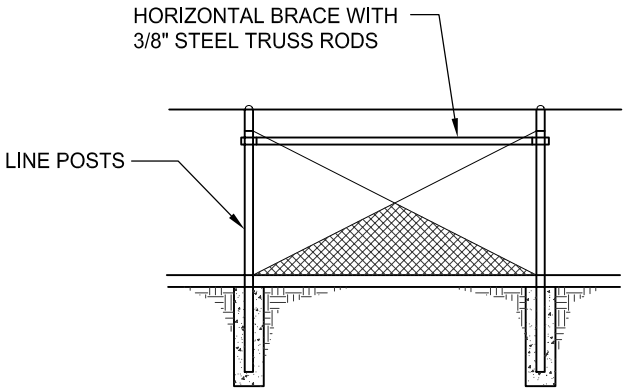

NOTES:

- FENCE LOCATION AS SHOWN ON PLANS
- LINE POSTS AT 500' MAX. INTERVALS BRACED & TRUSSED IN BOTH DIRECTIONS. ALL CONSTRUCTION AND MATERIALS IN CONFORMANCE WITH SECTION 10-38 OF THE STANDARD SPECIFICATIONS.

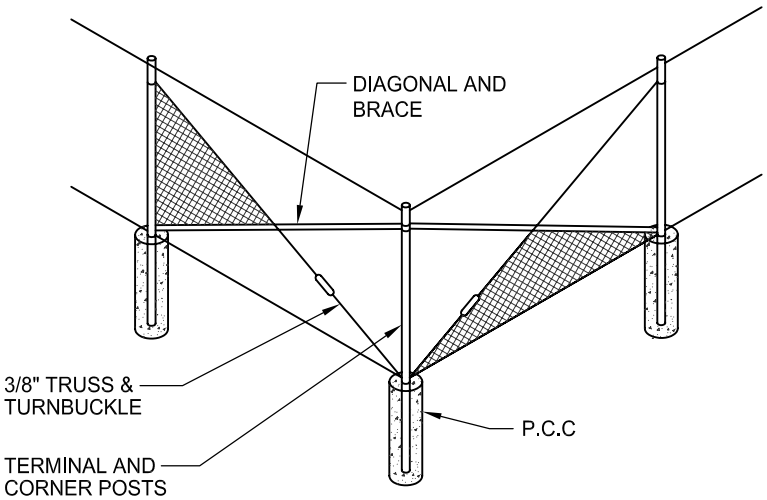

REV.	DATE	DESCRIPTION

CITY OF SACRAMENTO
DEPARTMENT OF TRANSPORTATION

CHAIN LINK FENCE AND GATE

APPR'D BY: Nicholas Thomas NO SCALE
DATE: MAY 2007 DWG. NO. T - 90

R:\Utilstds\City_Std_Details\DOT_Civil_Details\T-90

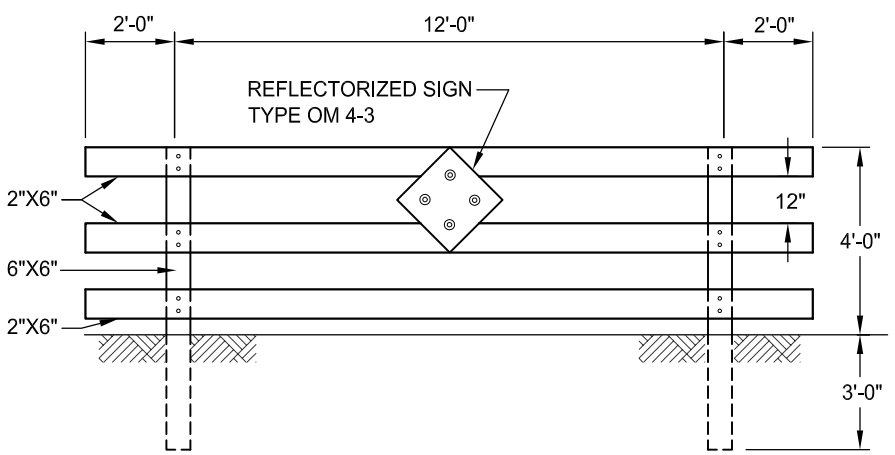

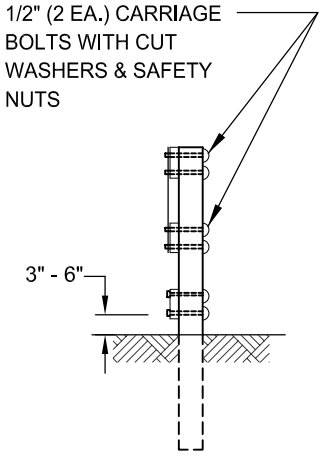

NOTES:

1. MATERIALS

   3-2"x6"x16' WOOD PLANKS - TREATED DOUGLAS FIR
   2-6"x6"x7' WOOD POSTS - TREATED DOUGLAS FIR
   1-18"x18" TYPE N (RED) REFLECTORIZED SIGN

   } IN CONFORMANCE WITH SEC. 56-2.02 CALTRANS STANDARD SPECIFICATIONS

2. INSTALLATION

   PLANKS SHALL BE FASTENED TO
   POSTS WITH 5/16" CARRIAGE BOLTS.
   CUT WASHERS, AND SAFETY NUTS.
   ALL HARDWARE GALVANIZED.

3. LOCATION

   THE LOCATION SHALL BE AS
   SHOWN ON THE PLANS OR
   DESIGNATED BY THE ENGINEER.

4. PAINT

   TWO COATS OF EXTERIOR GRADE WHITE PAINT
   CONFORMING TO CALTRANS STANDARD SPECIFICATIONS
   SECTION 91-3.02 SHALL BE APPLIED TO ALL
   EXPOSED WOOD SURFACES.

5. BARRICADE MUST BE FULL WIDTH BETWEEN
   FACES OF CURBS WHERE REQUIRED.

REV.	DATE	DESCRIPTION

R:\Utilstds\City_Std_Details\DOT_Civil_Details\T-101

CITY OF SACRAMENTO
DEPARTMENT OF TRANSPORTATION

STREET BARRICADE

APPR'D BY: Nicholas Thomas NO SCALE
DATE: MAY 2007 DWG. NO. **T - 101**

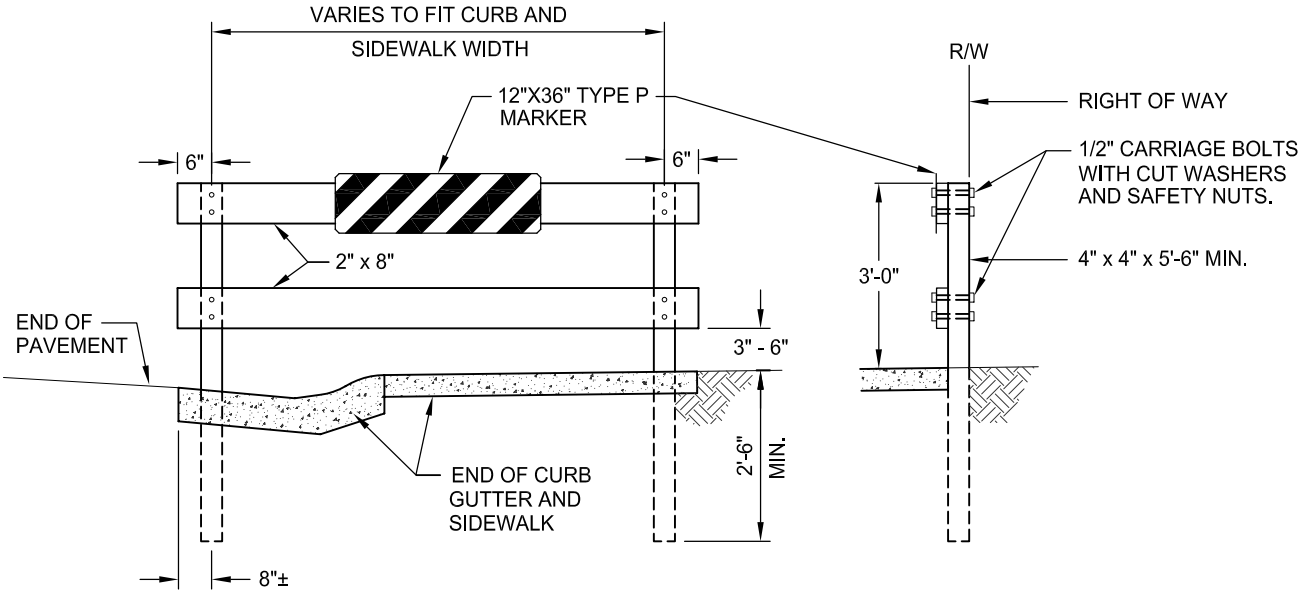

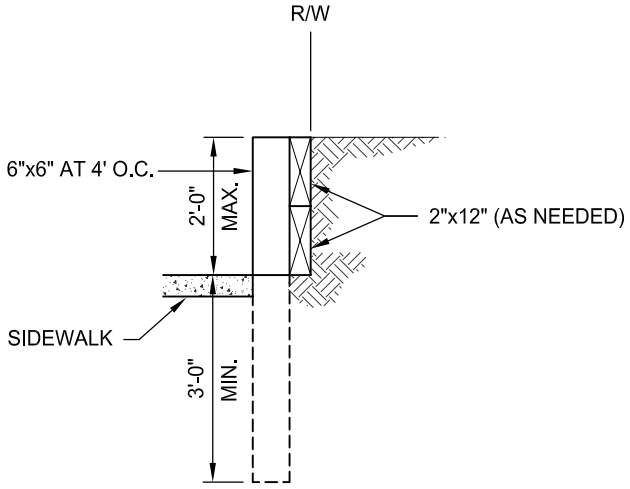

STREET ENDING IN CUT WHERE
SLOPE NOT OBTAINABLE

NOTES:

1. SIDEWALK BARRICADE TO BE ERECTED AT EACH LOCATION WHERE SATISFACTORY PROVISION CANNOT BE MADE FOR PEDESTRIANS TO CONTINUE BEYOND THE TERMINOUS OF A SIDEWALK AND STREET.

2. ALL EXPOSED SURFACES TO BE PAINTED WITH TWO (2) COATS OF WHITE PAINT. ALL PAINT TO CONFORM TO SEC. 91-3.02 OF CALTRANS STANDARD SPECIFICATIONS.

3. ALL MATERIAL USED IN THE CONSTRUCTION OF BARRICADE SHALL BE TREATED DOUGLAS FIR IN CONFORMANCE WITH SEC 56-2.02 OF CALTRANS STANDARD SPECIFICATIONS.

REV.	DATE	DESCRIPTION

CITY OF SACRAMENTO
DEPARTMENT OF TRANSPORTATION

CURB, GUTTER AND SIDEWALK BARRICADE

APPR'D BY: Nicholas Hernandez NO SCALE
DATE: MAY 2007 DWG. NO. T - 102

R:\Utilstds\City_Std_Details\DOT_Civil_Details\T-102

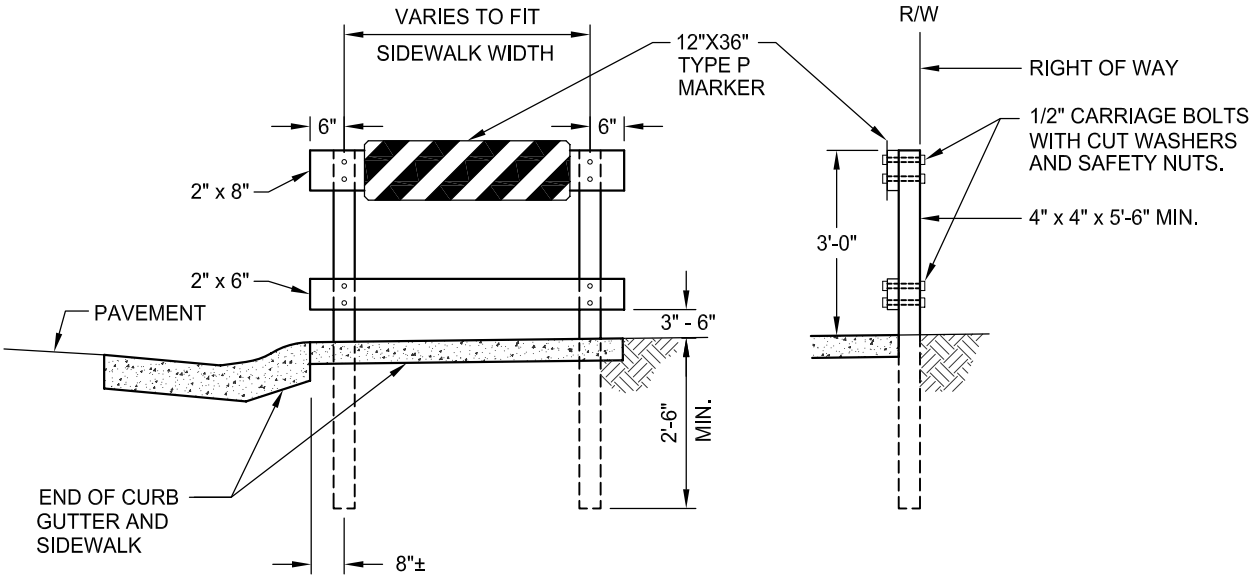

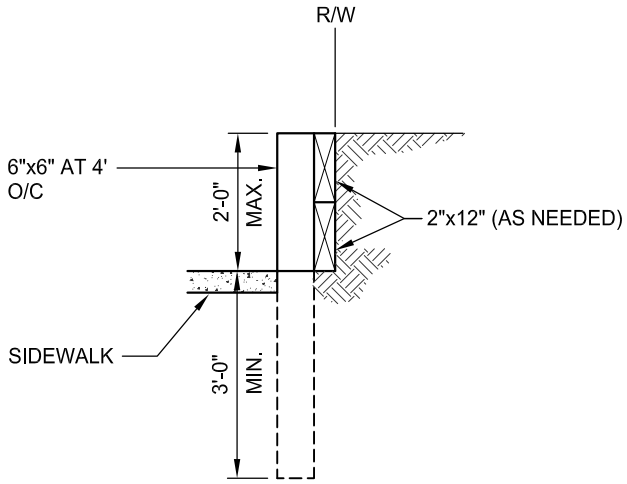

STREET ENDING IN CUT WHERE
SLOPE NOT OBTAINABLE

NOTES:

1. SIDEWALK BARRICADE TO BE ERECTED AT EACH LOCATION WHERE SATISFACTORY PROVISION CANNOT BE MADE FOR PEDESTRIANS TO CONTINUE BEYOND THE TERMINOUS OF A SIDEWALK.

2. ALL EXPOSED SURFACES TO BE PAINTED WITH TWO (2) COATS OF WHITE PAINT. ALL PAINT TO CONFORM TO SEC. 91-3.02 OF CALTRANS STANDARD SPECIFICATIONS.

3. ALL MATERIAL USED IN THE CONSTRUCTION OF BARRICADE SHALL BE TREATED DOUGLAS FIR IN CONFORMANCE WITH SEC.56-2.02 OF CALTRANS STANDARD SPECIFICATIONS.

REV.	DATE	DESCRIPTION

R:\Utilstds\City_Std_Details\DOT_Civil_Details\T-103

CITY OF SACRAMENTO
DEPARTMENT OF TRANSPORTATION

SIDEWALK BARRICADE

APPR'D BY: Nicholas Thomas NO SCALE
DATE: MAY 2007 DWG. NO. **T - 103**

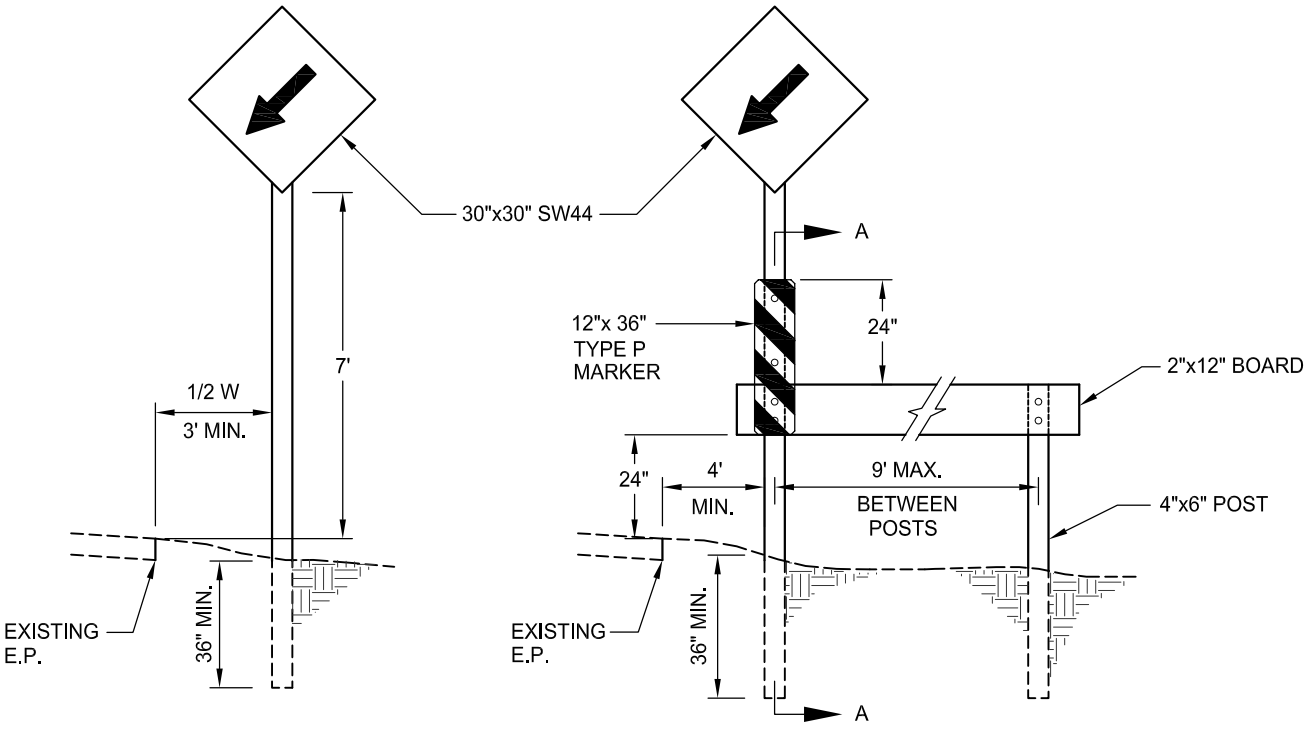

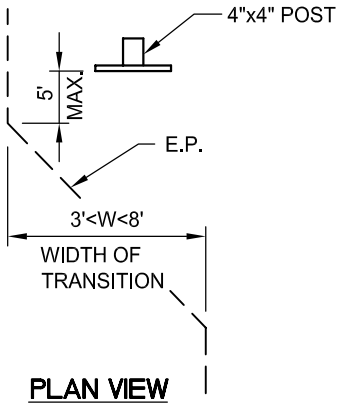

PLAN VIEW

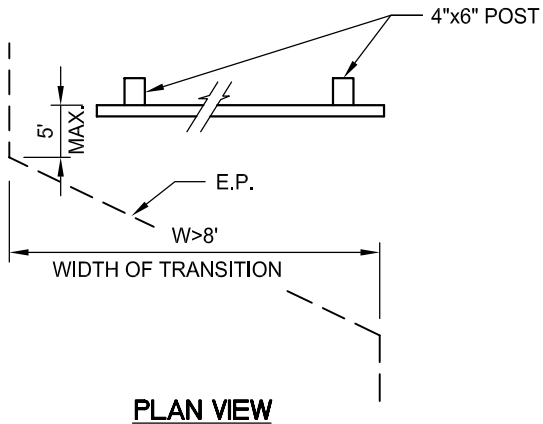

PLAN VIEW

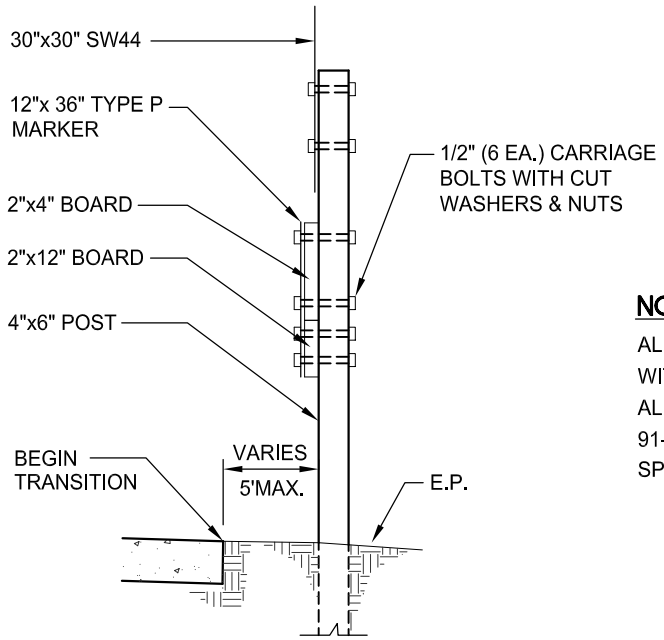

SECTION A-A

NOTES:

ALL EXPOSED SURFACES SHALL BE PAINTED WITH TWO (2) COATS OF WHITE PAINT. ALL PAINT TO CONFORM WITH SECTION 91-3.02 OF THE CALTRANS STANDARD SPECIFICATIONS.

REV.	DATE	DESCRIPTION

CITY OF SACRAMENTO
DEPARTMENT OF TRANSPORTATION

SIGNS AND BARRICADES AT END OF PAVEMENT WIDENING

APPR'D BY: Nicholas Thomas NO SCALE

DATE: MAY 2007 DWG. NO. T - 110

R:\Utilstds\City_Std_Details\DOT_Civil_Details\T-110

NOTE:

DEPTH OF PLANED PAVEMENT SHALL BE 0.17' AT CROSS STREET AND SHALL PROGRESSIVELY DECREASE TO 0" OVER 50'

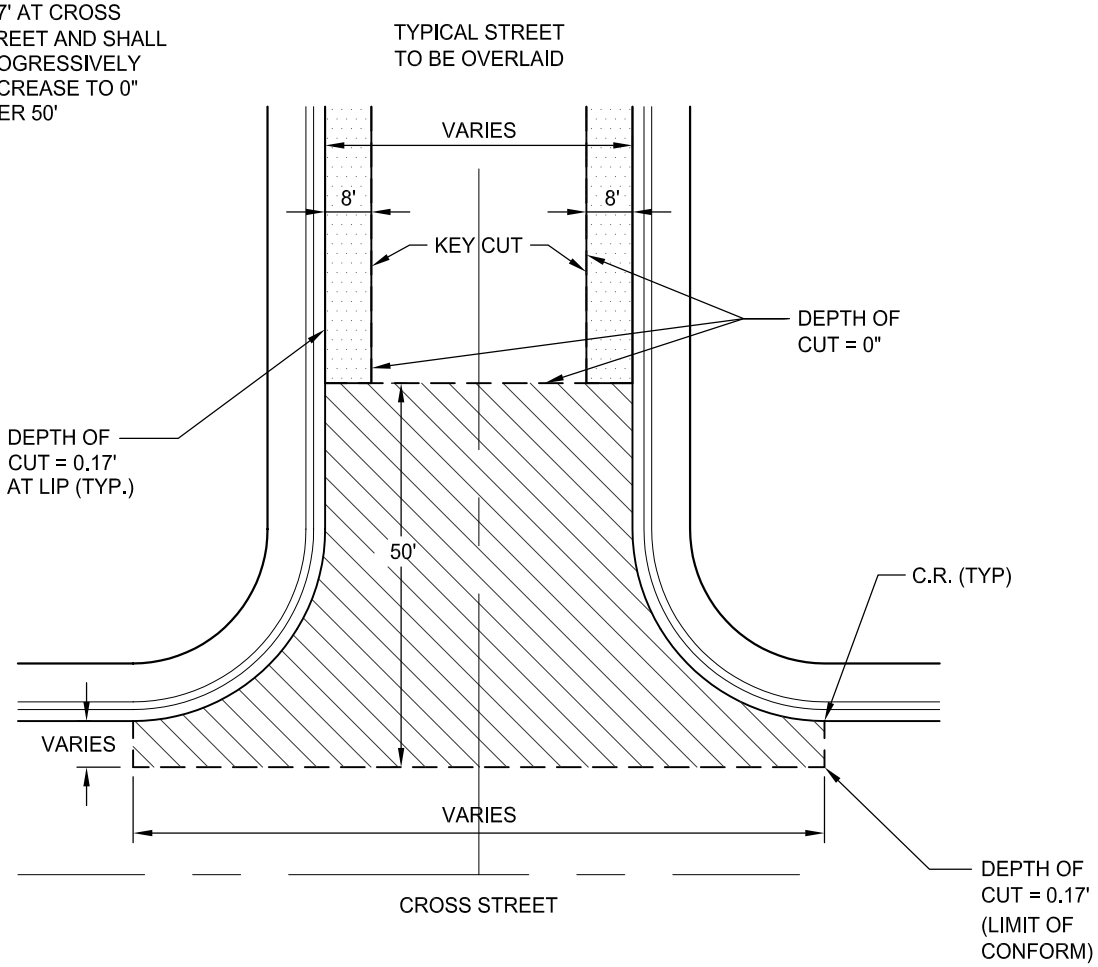

CONSTRUCT WHERE THE BEGINNING OR ENDING LIMIT OF WORK IS A CROSS STREET

50'-0" CONFORM DETAIL

REV.	DATE	DESCRIPTION

CITY OF SACRAMENTO DEPARTMENT OF TRANSPORTATION	50'-0" CONFORM DETAIL	APPR'D BY: Nicholas Thomas NO SCALE DATE: MAY 2007 DWG. NO. T - 120

R: \Utilstds\City_Std_Details\DOT_Civil_Details\T-120

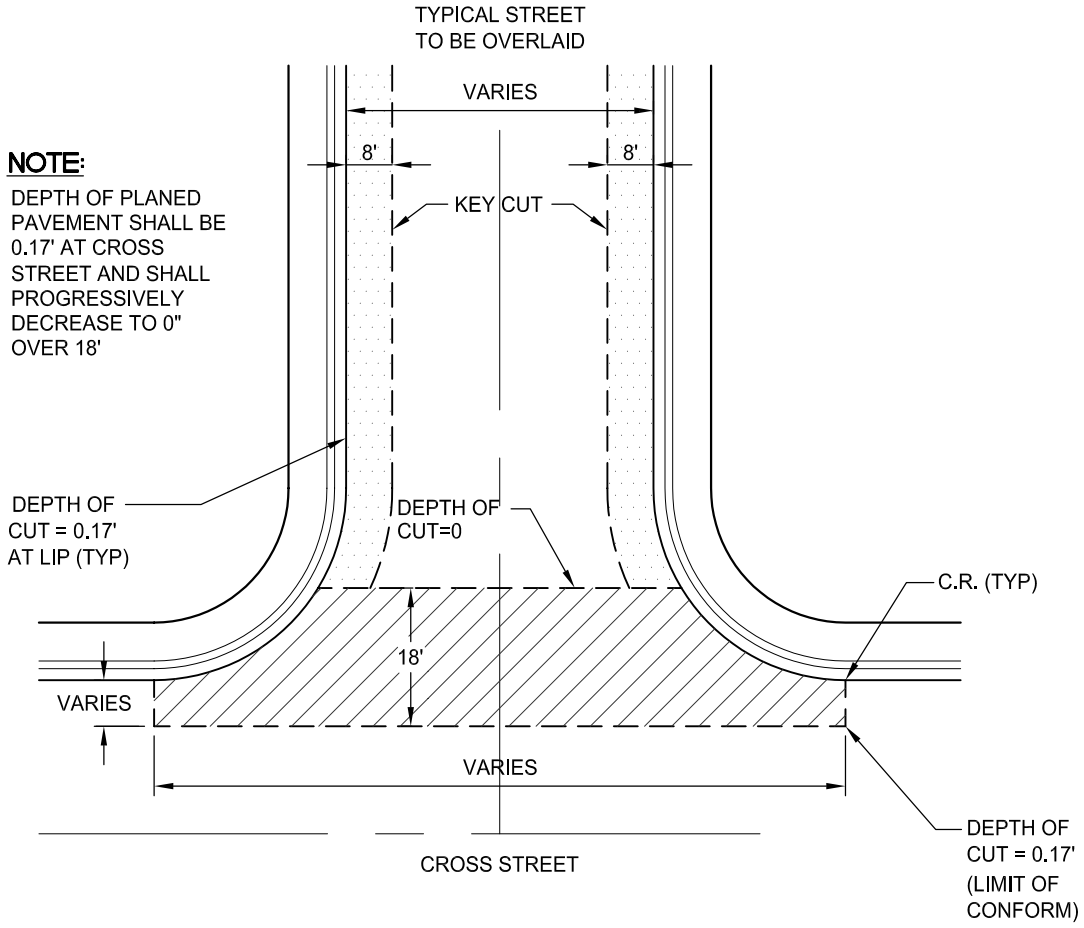

CONSTRUCT WHERE THE BEGINNING OR ENDING LIMIT OF WORK IS A CROSS STREET

18'-0" CONFORM DETAIL

R: \Utilstds\City_Std_Details\DOT_Civil_Details\T-130

REV.	DATE	DESCRIPTION

CITY OF SACRAMENTO DEPARTMENT OF TRANSPORTATION	18'-0" CONFORM DETAIL	APPR'D BY: Nicholas Thomas NO SCALE DATE: MAY 2007 DWG. NO. T - 130

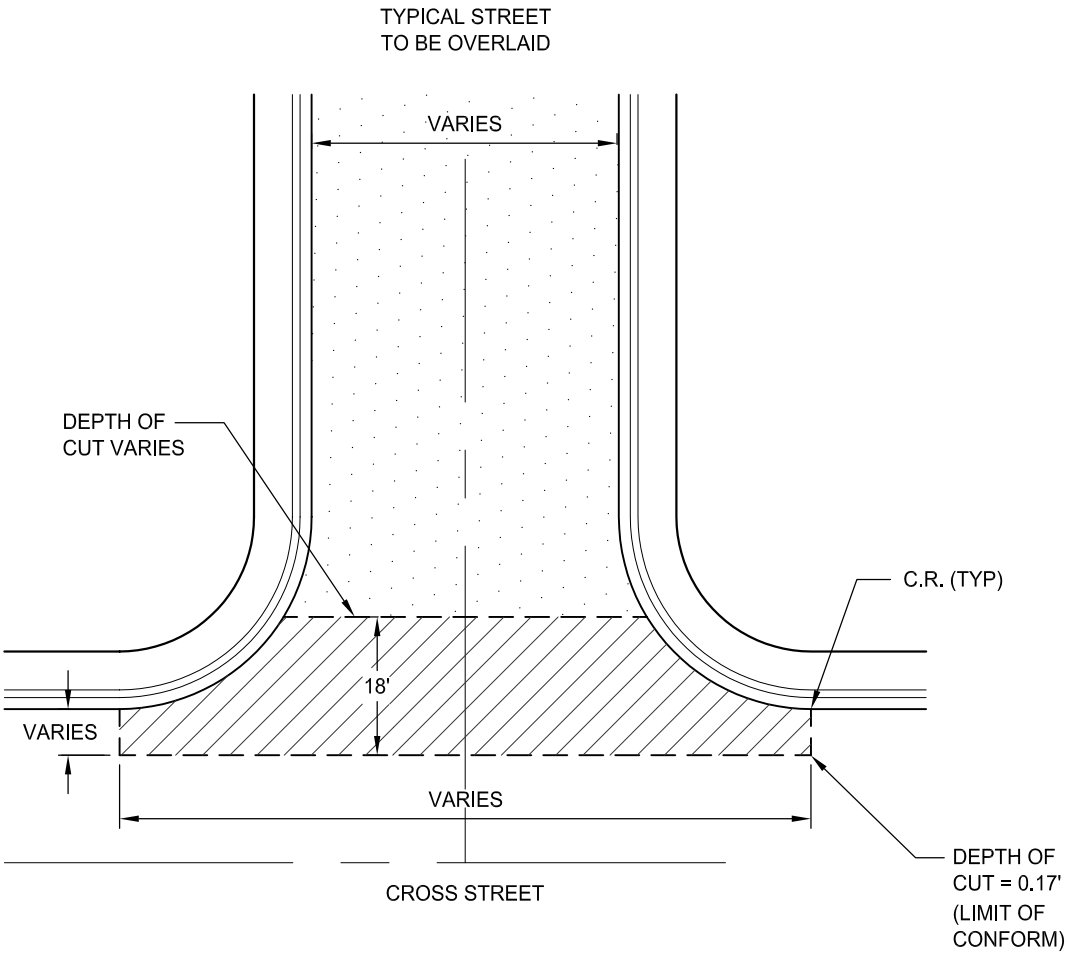

CONSTRUCT WHERE THE BEGINNING OR ENDING LIMIT OF WORK IS A CROSS STREET

18'-0" CONFORM DETAIL
(WITHOUT KEY CUT)

R: \Utilstds\City_Std_Details\DOT_Civil_Details\T-140

REV.	DATE	DESCRIPTION

CITY OF SACRAMENTO DEPARTMENT OF TRANSPORTATION	18'-0" CONFORM DETAIL	APPR'D BY: Nicholas Thomas NO SCALE DATE: MAY 2007 DWG. NO. T - 140

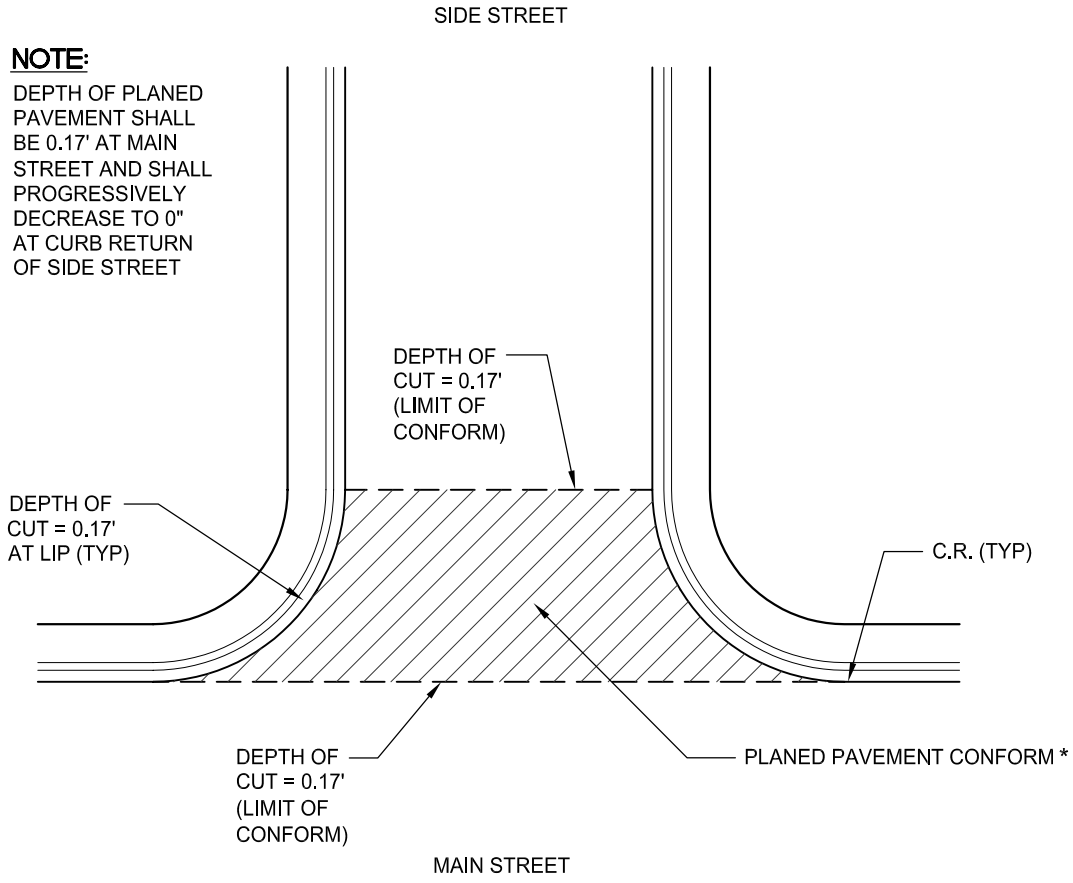

* THIS CONFORM WILL BE APPLIED WHERE THE ENTIRE MAIN STREET IS BEING PLANED OR KEYCUT.

SIDE STREET CONFORM DETAIL

R: \Utilstds\City_Std_Details\DOT_Civil_Details\T-150

REV.	DATE	DESCRIPTION

CITY OF SACRAMENTO DEPARTMENT OF TRANSPORTATION	SIDE STREET CONFORM DETAIL	APPR'D BY: Nicholas Thomas NO SCALE DATE: MAY 2007 DWG. NO. T - 150

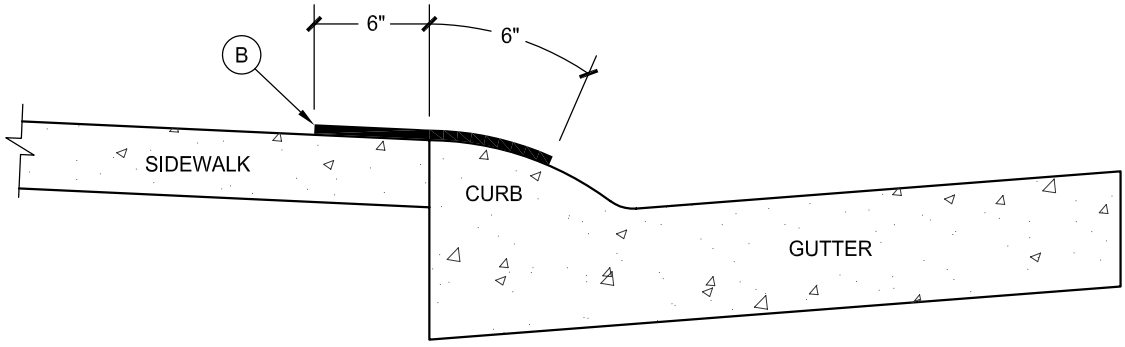

CURB AND GUTTER TYPE 1

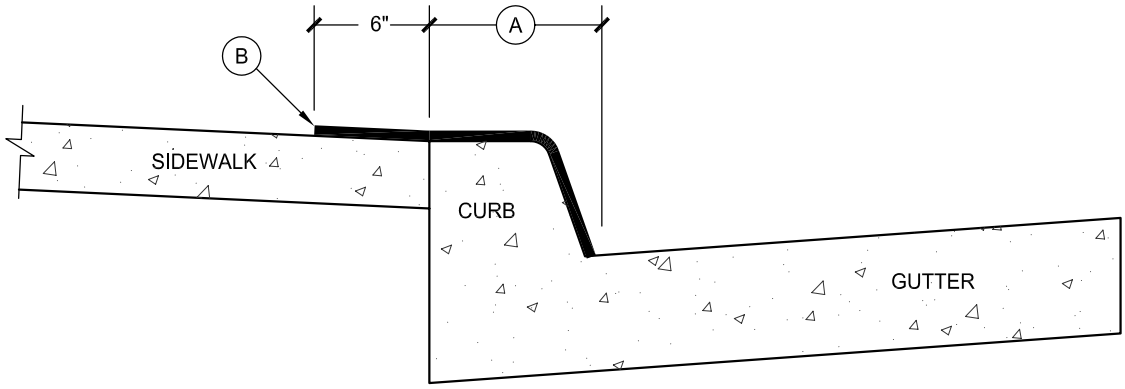

CURB AND GUTTER TYPE 2

NOTES:

(A) THIS DISTANCE VARIES. IT SHOULD EXTEND TO THE LOWER LIMITS OF THE FACE OF CURB.

(B) INDICATES PAINTED SURFACES

REV.	DATE	DESCRIPTION

CITY OF SACRAMENTO
DEPARTMENT OF TRANSPORTATION

CURB PAINTING

APPR'D BY: Nicholas Thomas NO SCALE
DATE: MAY 2007 DWG. NO. T - 160

R:\Utilstds\City_Std_Details\DOT_Civil_Details\T-160

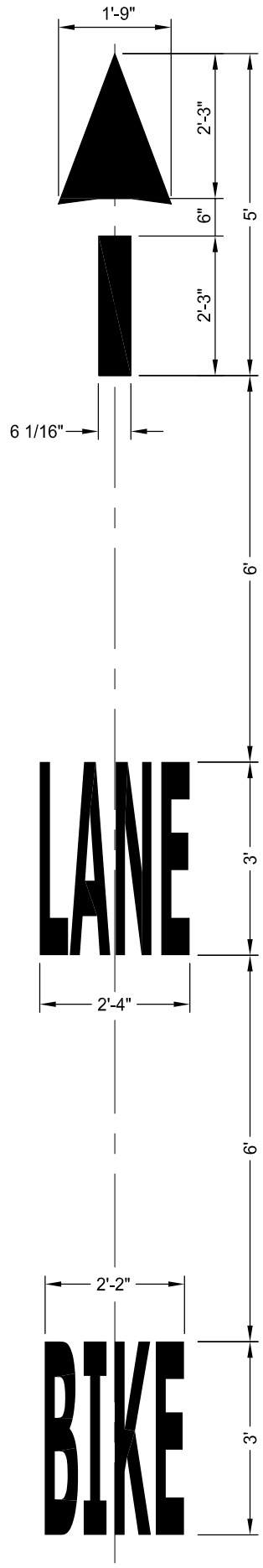

BIKE LANE

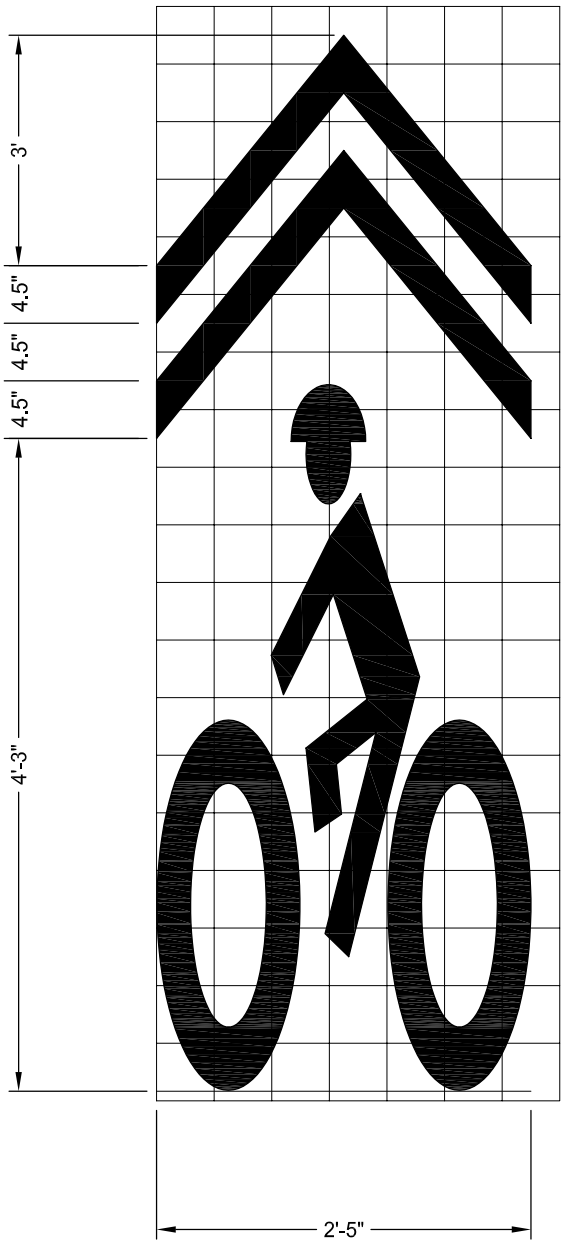

BIKE ROUTE

REV.	DATE	DESCRIPTION

CITY OF SACRAMENTO
DEPARTMENT OF TRANSPORTATION

BIKE LANE/ROUTE MARKINGS

APPR'D BY: Nicholas Thomas NO SCALE

DATE: MAY 2007 DWG. NO. **T - 170**

R:\Utilstds\City_Std_Details\DOT_Civil_Details\T-170

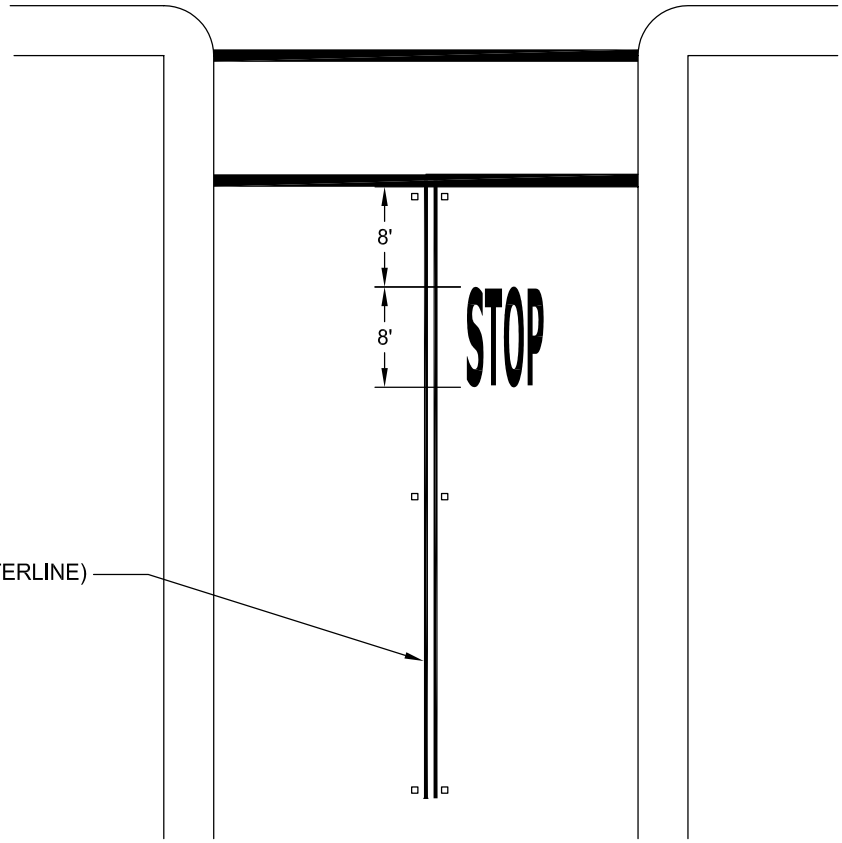

NON-SIGNALIZED
INTERSECTION

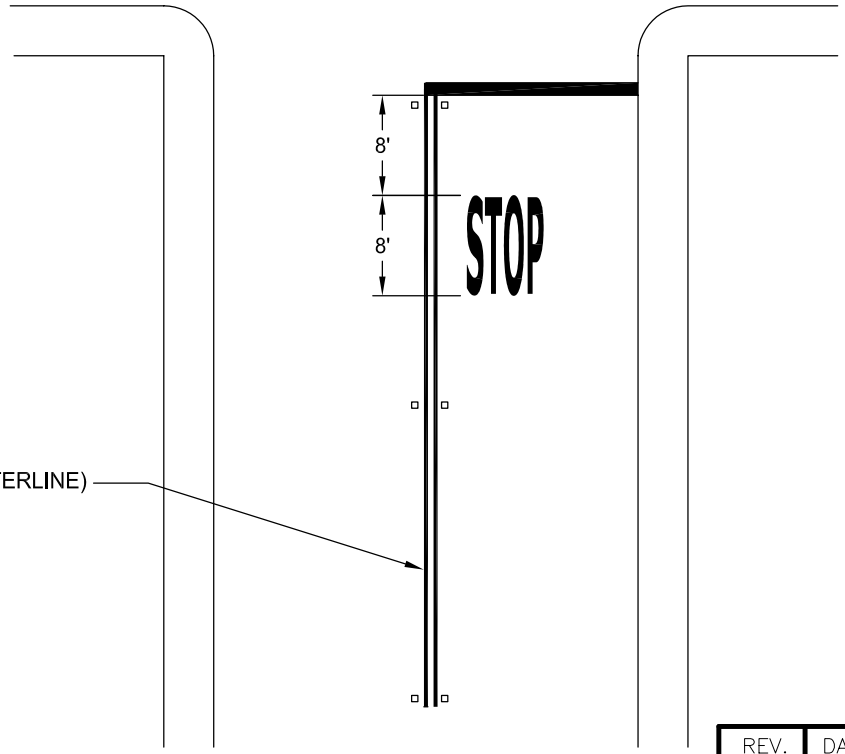

NON-SIGNALIZED
INTERSECTION

REV.	DATE	DESCRIPTION
1		
2		
3		

CITY OF SACRAMENTO
DEPARTMENT OF TRANSPORTATION

CROSSWALK, CENTERLINE
AND STOP LEGEND

APPR'D BY: Nicholas Thomas NO SCALE
DATE: MAY 2007 DWG. NO. **T - 180**

R:\Utilstds\City_Std_Details\DOT_Civil_Details\T-180

R:\Utilstds\City_Std_Details\DOT_Civil_Details\T-190

CITY OF SACRAMENTO
DEPARTMENT OF TRANSPORTATION

DISABLED PARKING SIGNING AND STRIPING

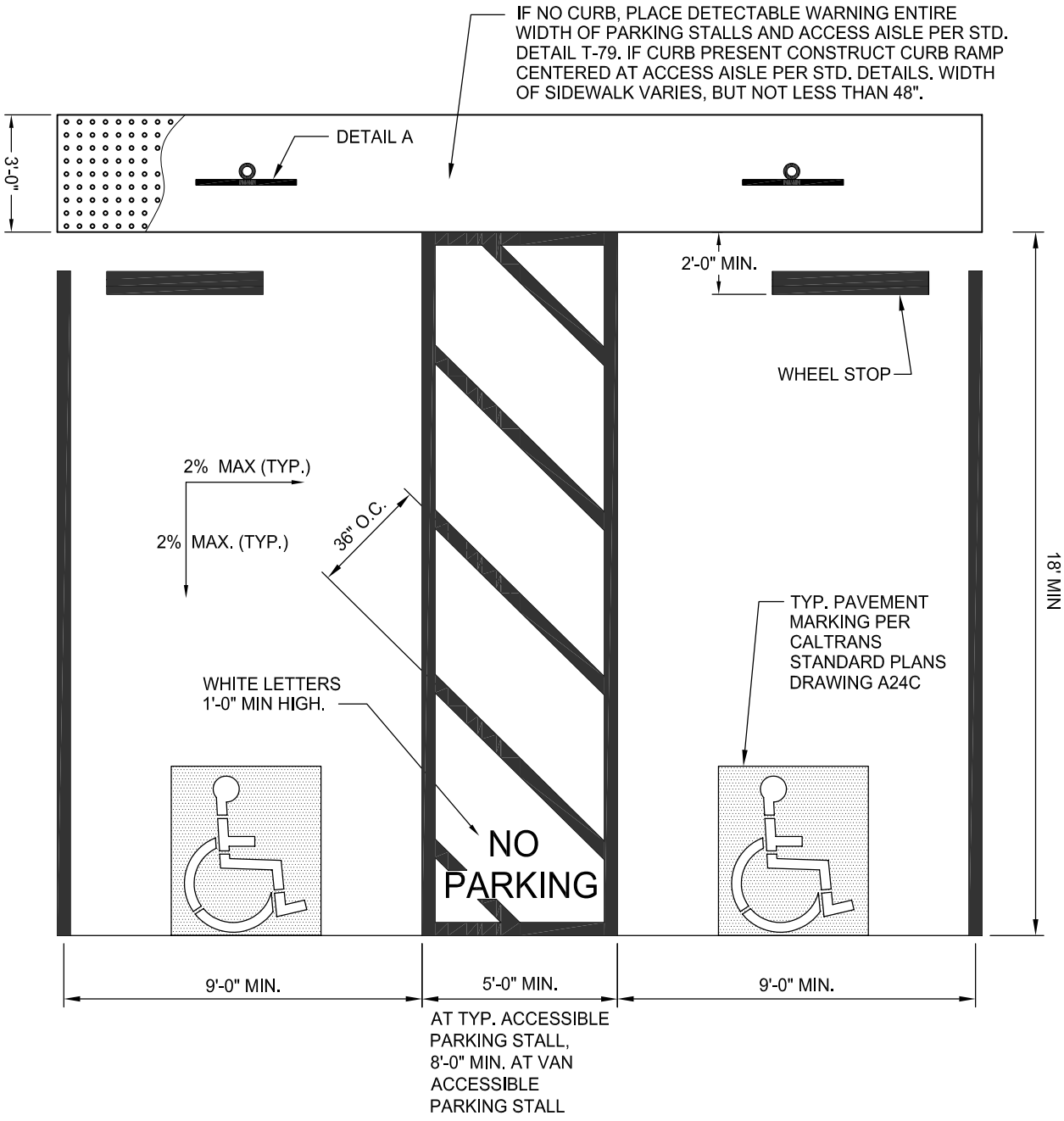

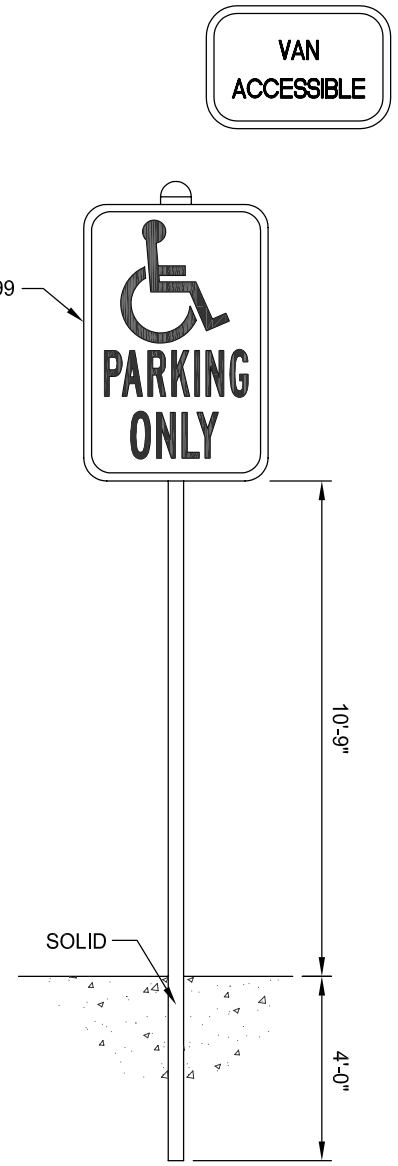

DETAIL A

REV.	DATE	DESCRIPTION

APPR'D BY: Nicholas Hendricks
DATE: MAY 2007
NO SCALE
DWG. NO. **T - 190**

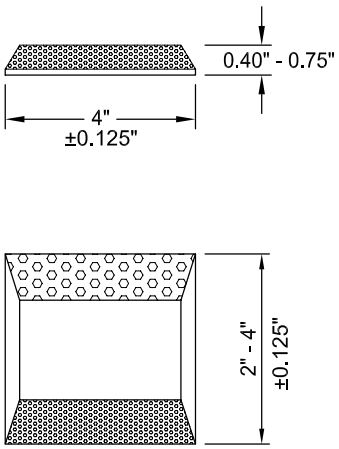

TYPE C MARKER
(1-WAY CLEAR REFLECTIVE,
WRONG-WAY RED REFLECTIVE)

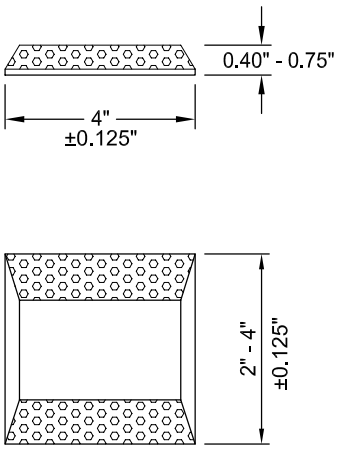

TYPE D MARKER
(2-WAY YELLOW
REFLECTIVE)

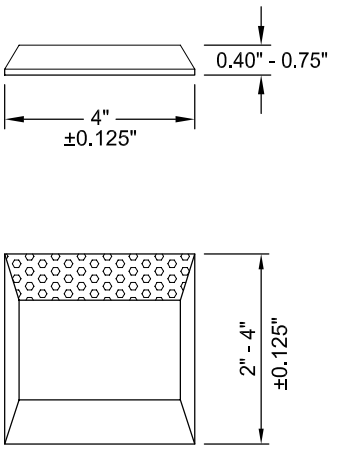

TYPE H MARKER
(1-WAY YELLOW
REFLECTIVE)

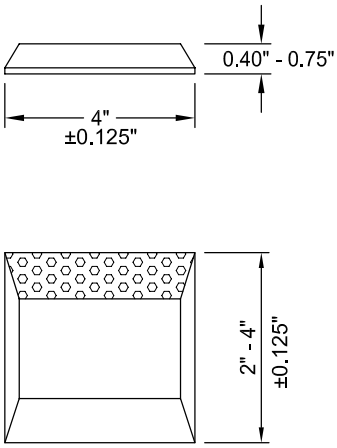

TYPE G MARKER
(1-WAY CLEAR REFLECTIVE)

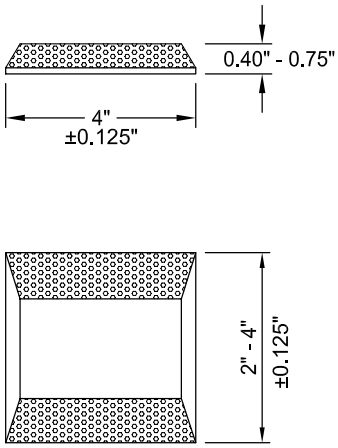

HYDRANT MARKER
(2-WAY BLUE REFLECTIVE)

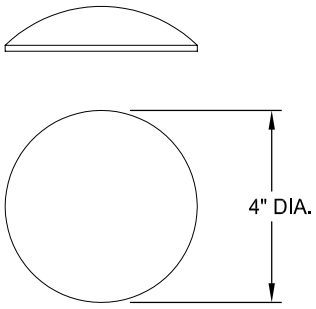

TYPE A MARKER
WHITE
(NON-REFLECTIVE)

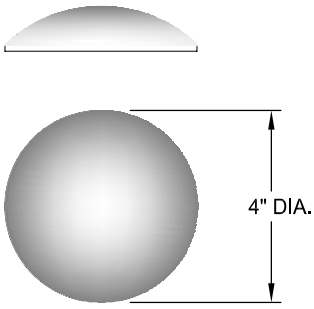

TYPE AY MARKER
YELLOW
(NON-REFLECTIVE)

REV.	DATE	DESCRIPTION

R:\Utilstds\City_Std_Details\DOT_Civil_Details\T-200

CITY OF SACRAMENTO
DEPARTMENT OF TRANSPORTATION

RAISED PAVEMENT
MARKERS (RPM'S)

APPR'D BY: Nicholas Thomas NO SCALE
DATE: MAY 2007 DWG. NO. **T - 200**

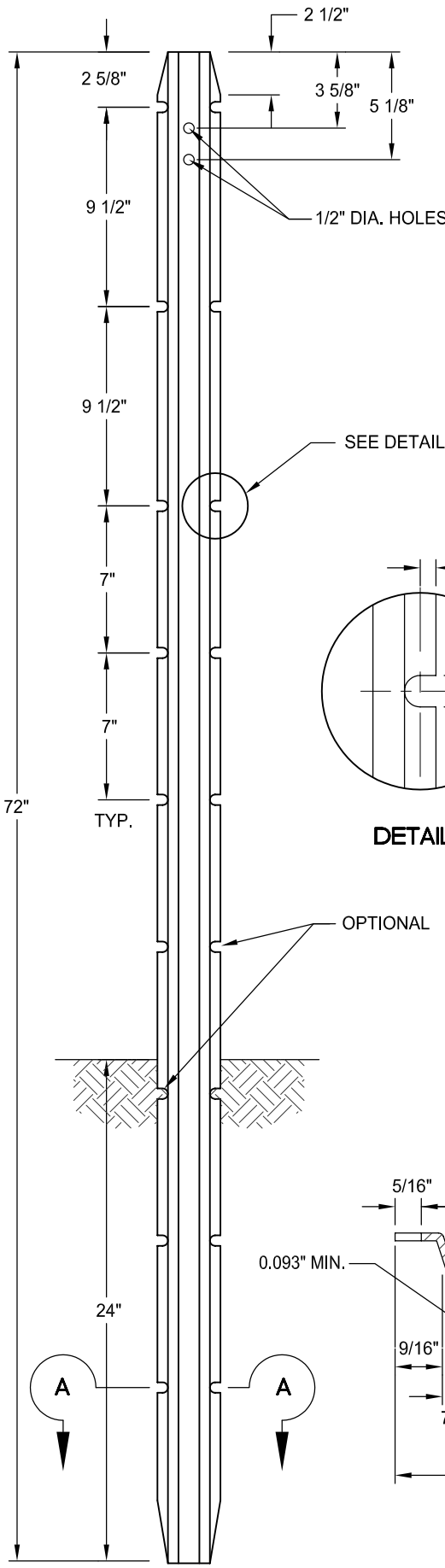

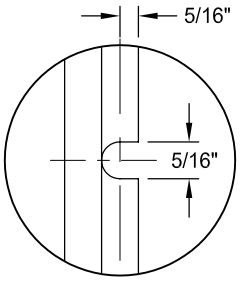

DETAIL A

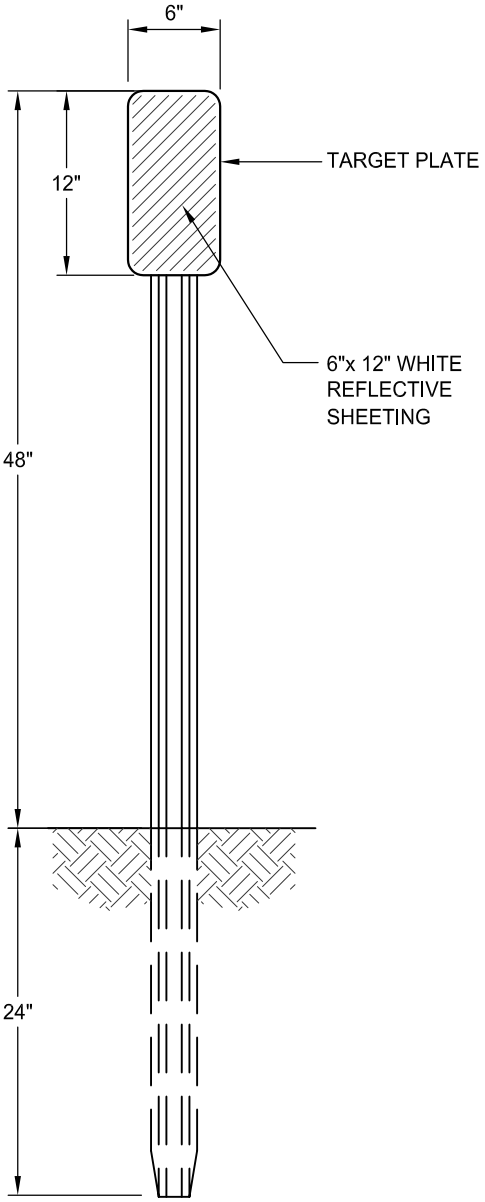

TYPE L-3
OBJECT MARKER

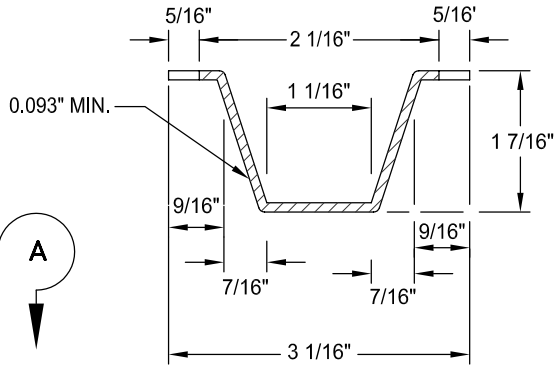

SECTION A-A

METAL POST DETAIL

NOTE:

METAL POST TO BE AS SHOWN EXCEPT THAT MINOR VARIATIONS IN DESIGN AND DIMENSIONS WILL BE PERMITTED TO MEET MANUFACTURER'S STANDARDS

REV.	DATE	DESCRIPTION

R:\Utilstds\City_Std_Details\DOT_Civil_Details\T-210

CITY OF SACRAMENTO
DEPARTMENT OF TRANSPORTATION

OBJECT MARKER
DETAIL

APPR'D BY: Nicholas Hernandez NO SCALE
DATE: MAY 2007 DWG. NO. **T - 210**

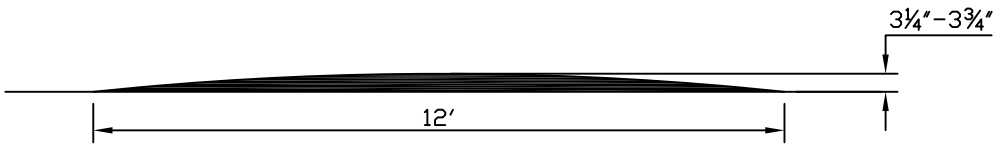

SIDE VIEW

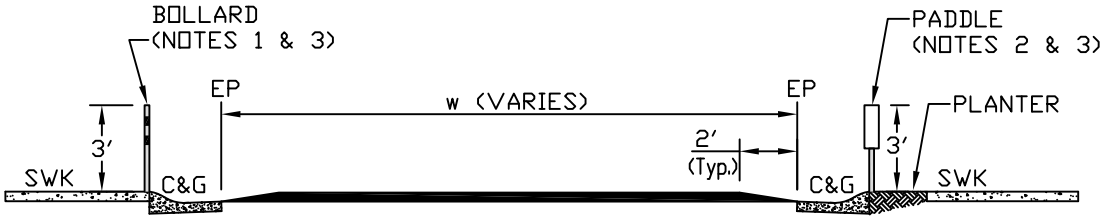

FRONT VIEW

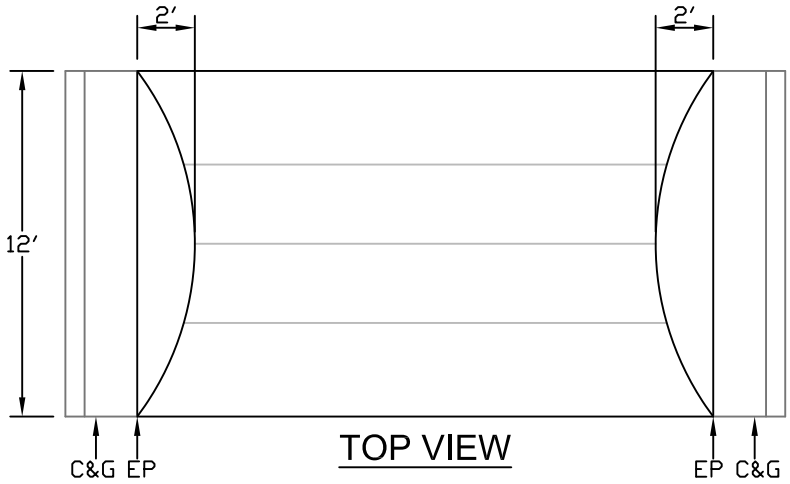

TOP VIEW

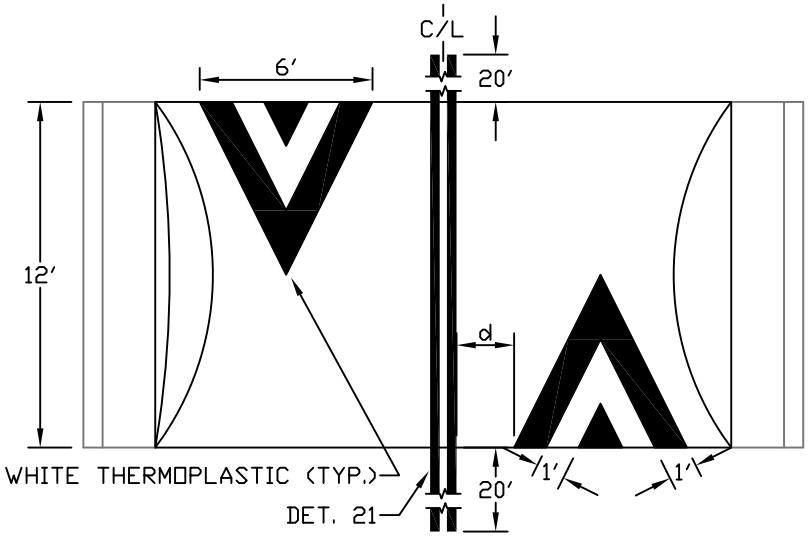

STRIPING DETAIL

hump width (w)	(d)
20' - 32'	2'-0"
32' +	3'-0"

LEGEND:

C&G - CURB AND GUTTER
EP - EDGE OF PAVEMENT
SWK - SIDEWALK

NOTES:

1. BOLLARD TO BE INSTALLED ON SIDEWALKS WITH ROLLED CURBS. SEE CITY STANDARD DWG. NO. T-230.
2. PADDLES TO BE INSTALLED ON PLANTER/DIRT WITH ROLLED CURBS OR UNIMPROVED STREETS. SEE CITY STANDARD DWG. NO. T-210.
3. NO BOLLARD OR PADDLE IS NEEDED WHERE TYPE 2 CURB & GUTTER IS PRESENT.

REV.	DATE	DESCRIPTION
1		
2		
3		

CITY OF SACRAMENTO
DEPARTMENT OF TRANSPORTATION

SPEED HUMP DETAIL

APPROVED BY: Heather Bruce SCALE: None
DATE: 08/31/09 DWG. NO. T-221

R:\Utilstds\Transportation\StdDwgs\T-221.dwg

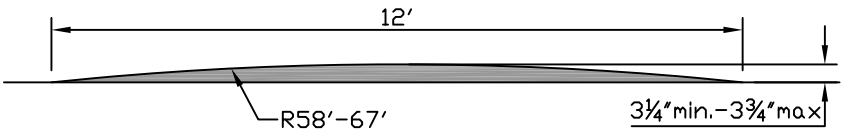

SPEED LUMP CROSS SECTION A-A

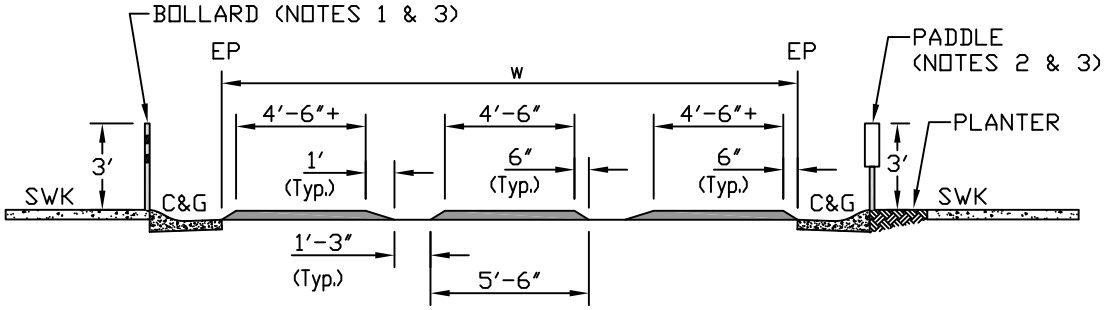

FRONT VIEW

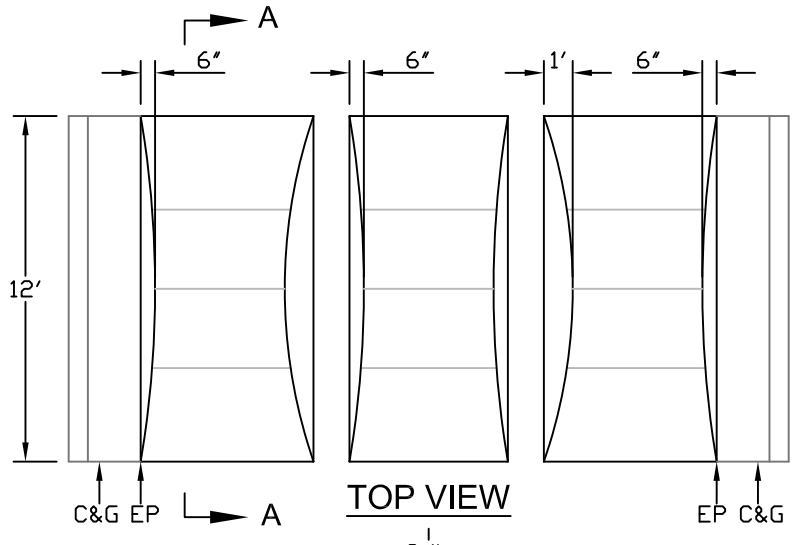

TOP VIEW

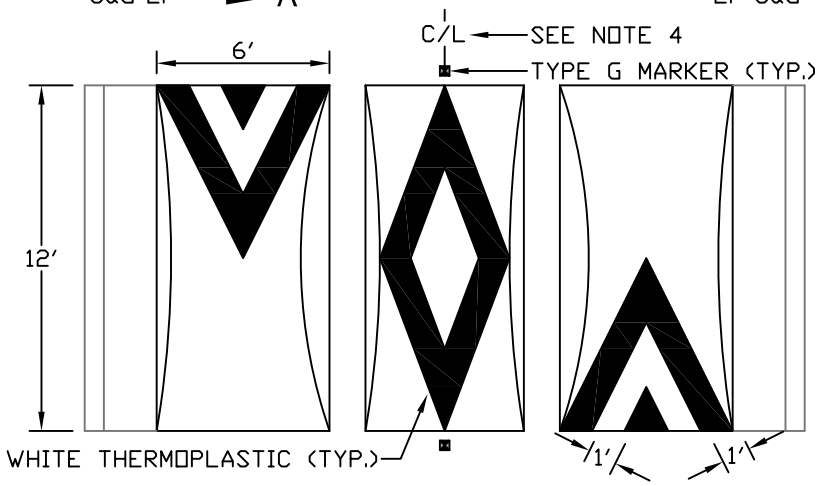

STRIPING DETAIL

LEGEND:

C&G - CURB AND GUTTER
EP - EDGE OF PAVEMENT
SWK - SIDEWALK

NOTES:

1. BOLLARD TO BE INSTALLED ON SIDEWALKS WITH ROLLED CURBS. SEE CITY STANDARD DWG. NO. T-230.
2. PADDLES TO BE INSTALLED ON PLANTER/DIRT WITH ROLLED CURBS OR UNIMPROVED STREETS. SEE CITY STANDARD DWG. NO. T-210.
3. NO BOLLARD OR PADDLE IS NEEDED WHERE TYPE 2 CURB & GUTTER IS PRESENT.
4. CENTER LUMP ON ROADWAY UNLESS OTHERWISE NOTED BY THE ENGINEER.

REV.	DATE	DESCRIPTION
1		
2		
3		

CITY OF SACRAMENTO
DEPARTMENT OF TRANSPORTATION

SPEED LUMP DETAIL (A)
(w) < 24′

APPROVED BY: Heather Bazz SCALE: None
DATE: 08/31/09 DWG. NO. T-222

R:\Utilstds\Transportation\StdDwgs\T-222.dwg

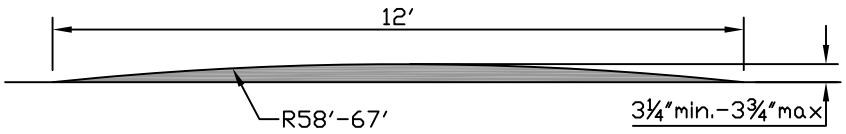

SPEED LUMP CROSS SECTION A-A

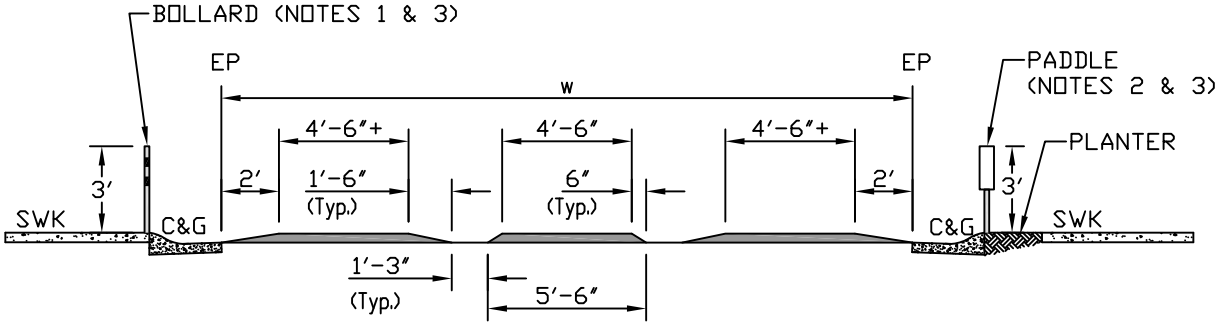

FRONT VIEW

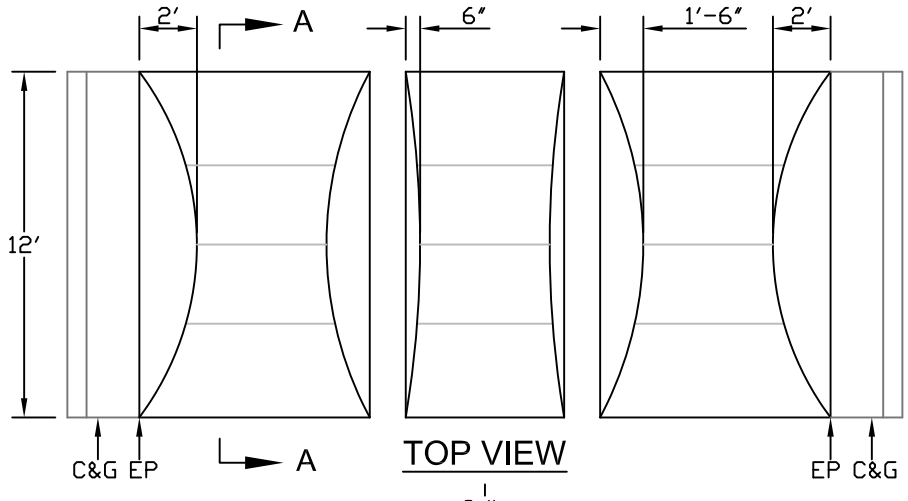

TOP VIEW

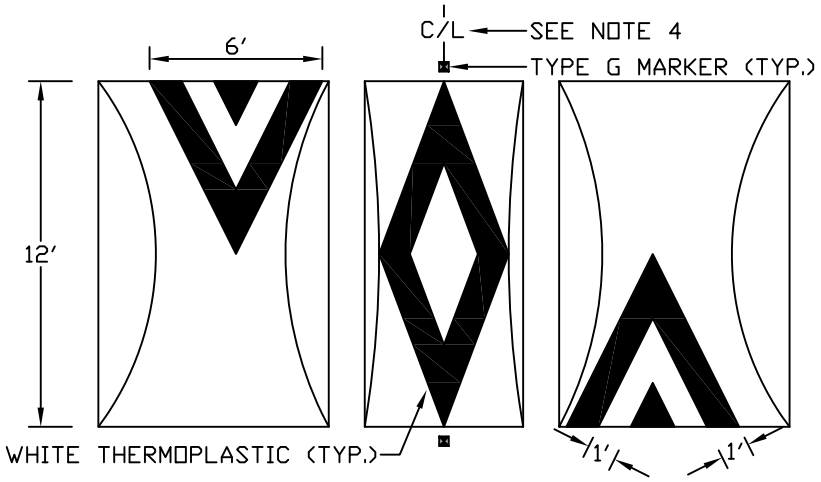

STRIPING DETAIL

LEGEND:

C&G - CURB AND GUTTER
EP - EDGE OF PAVEMENT
SWK - SIDEWALK

NOTES:

1. BOLLARD TO BE INSTALLED ON SIDEWALKS WITH ROLLED CURBS. SEE CITY STANDARD DWG. NO. T-230.
2. PADDLES TO BE INSTALLED ON PLANTER/DIRT WITH ROLLED CURBS OR UNIMPROVED STREETS. SEE CITY STANDARD DWG. NO. T-210.
3. NO BOLLARD OR PADDLE IS NEEDED WHERE TYPE 2 CURB & GUTTER IS PRESENT.
4. CENTER LUMP ON ROADWAY UNLESS OTHERWISE NOTED BY THE ENGINEER.

REV.	DATE	DESCRIPTION
1		
2		
3		

CITY OF SACRAMENTO
DEPARTMENT OF TRANSPORTATION

SPEED LUMP DETAIL (B)
(w) ≥24′ & <34′

APPROVED BY: Heather Bruce SCALE: None
DATE: 08/31/09 DWG. NO. T-223

R:\Utilstds\Transportation\StdDwgs\T-223.dwg

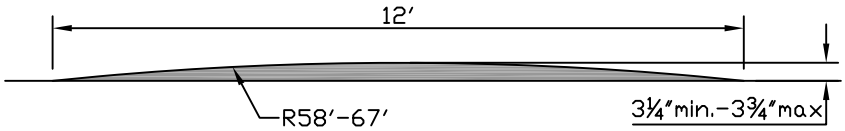

SPEED LUMP CROSS SECTION A-A

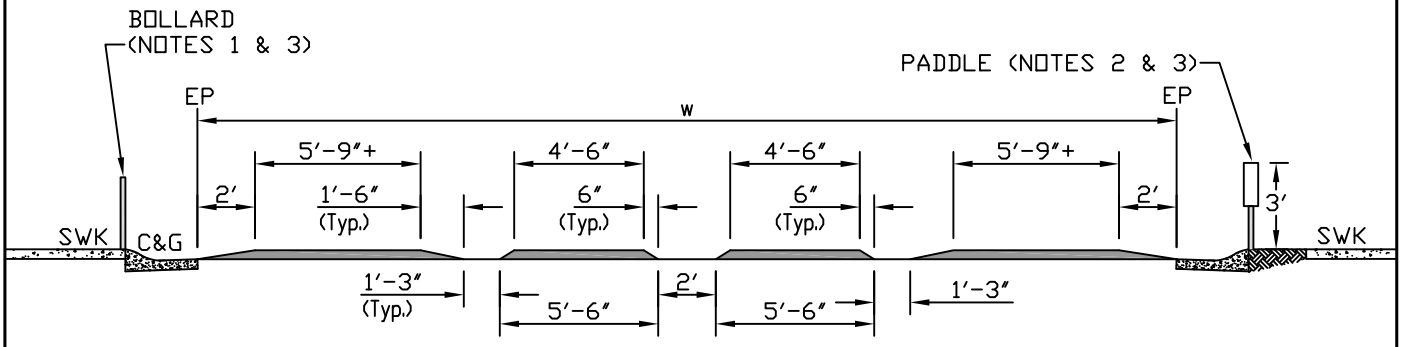

FRONT VIEW

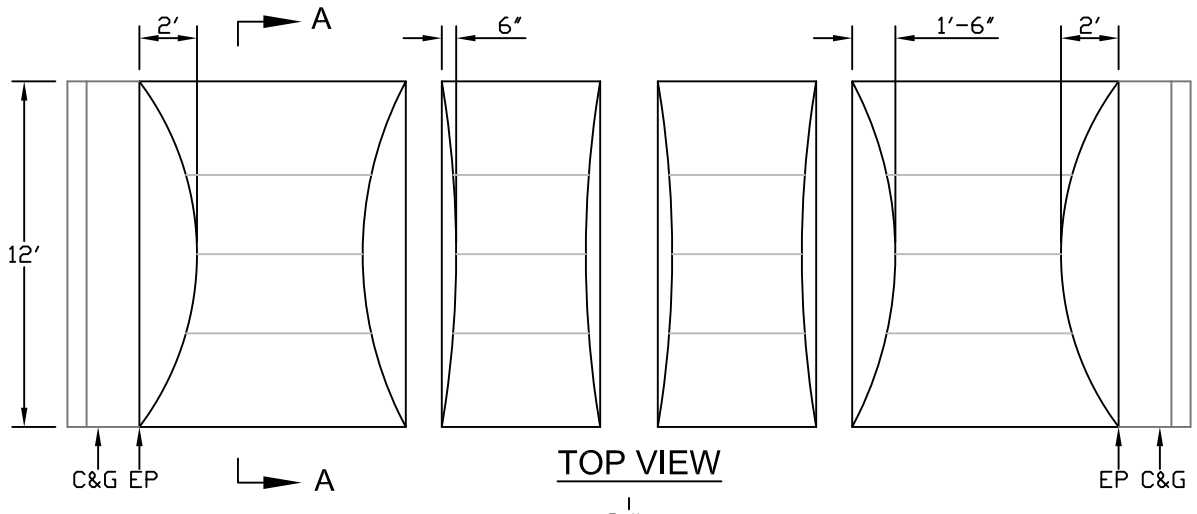

TOP VIEW

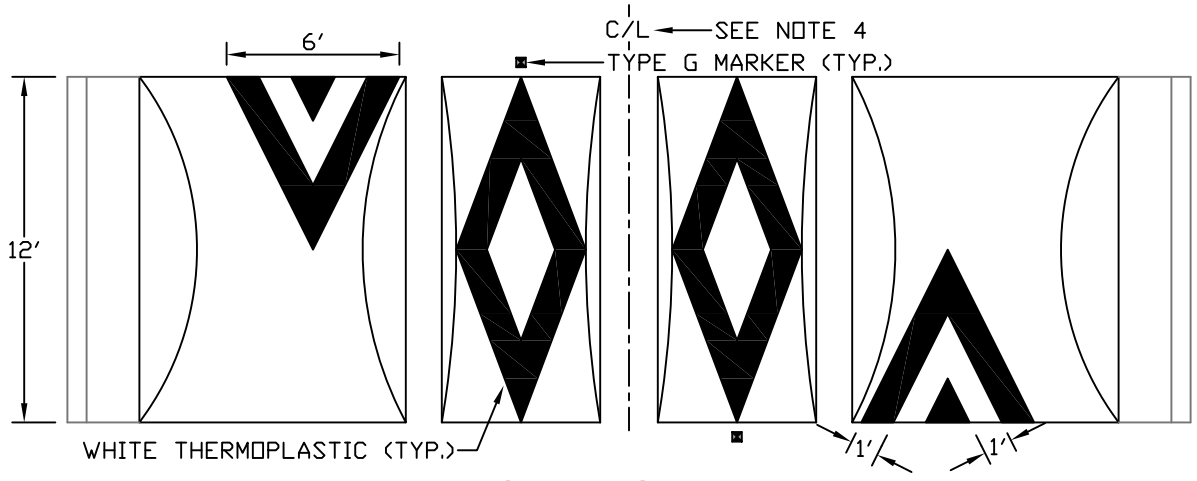

STRIPING DETAIL

LEGEND:

C&G - CURB AND GUTTER
EP - EDGE OF PAVEMENT
SWK - SIDEWALK

NOTES:

1. BOLLARD TO BE INSTALLED ON SIDEWALKS WITH ROLLED CURBS. SEE CITY STANDARD DWG. NO. T-230.
2. PADDLES TO BE INSTALLED ON PLANTER/DIRT WITH ROLLED CURBS OR UNIMPROVED STREETS. SEE CITY STANDARD DWG. NO. T-210.
3. NO BOLLARD OR PADDLE IS NEEDED WHERE TYPE 2 CURB & GUTTER IS PRESENT.
4. CENTER LUMP ON ROADWAY UNLESS OTHERWISE NOTED BY THE ENGINEER.

REV.	DATE	DESCRIPTION
1		
2		
3		

CITY OF SACRAMENTO
DEPARTMENT OF TRANSPORTATION

SPEED LUMP DETAIL (C)
(w) ≥34′ & <40′

APPROVED BY: Hector Barron SCALE: None
DATE: 08/31/09 DWG. NO. T-224

R:\Utilstds\Transportation\StdDwgs\T-224.dwg

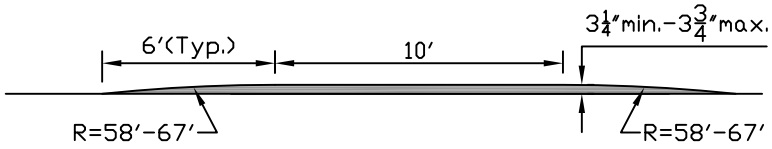

SPEED TABLE CROSS SECTION A-A

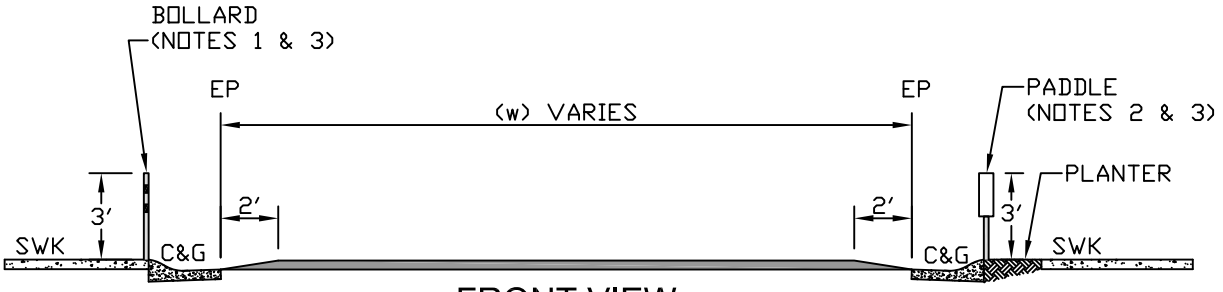

FRONT VIEW

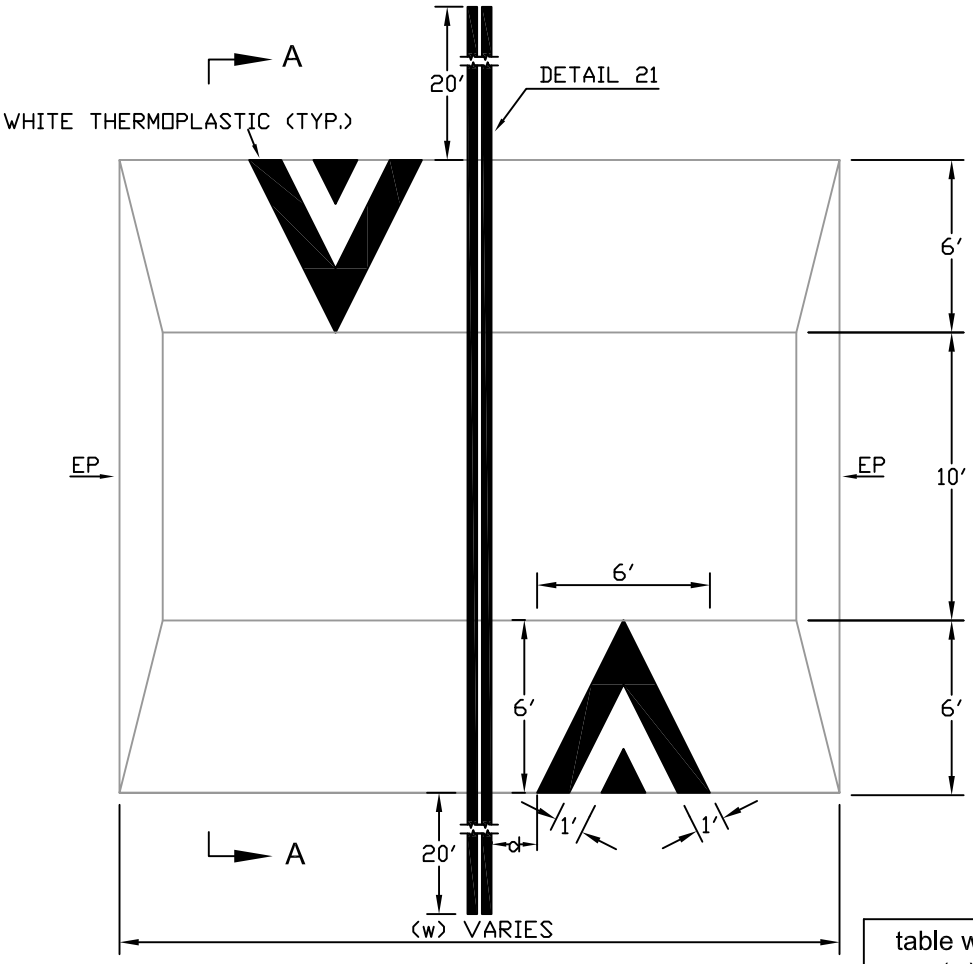

PLAN VIEW & STRIPING PLAN

table width (w)	(d)
20' - 32'	2'-0"
32' +	3'-0"

LEGEND:

C&G - CURB AND GUTTER
EP - EDGE OF PAVEMENT
SWK - SIDEWALK

NOTES:

1. BOLLARD TO BE INSTALLED ON SIDEWALKS WITH ROLLED CURBS. SEE CITY STANDARD DWG. NO. T-230.
2. PADDLES TO BE INSTALLED ON PLANTER/DIRT WITH ROLLED CURBS OR UNIMPROVED STREETS. SEE CITY STANDARD DWG. NO. T-210.
3. NO BOLLARD OR PADDLE IS NEEDED WHERE TYPE 2 CURB & GUTTER IS PRESENT.

REV.	DATE	DESCRIPTION

R:\Utilstds\Transportation\StdDwgs\T-226.dwg

CITY OF SACRAMENTO
DEPARTMENT OF TRANSPORTATION

SPEED TABLE DETAIL

APPROVED BY: Hector Baez SCALE: None
DATE: 08/31/09 DWG. NO. T-226

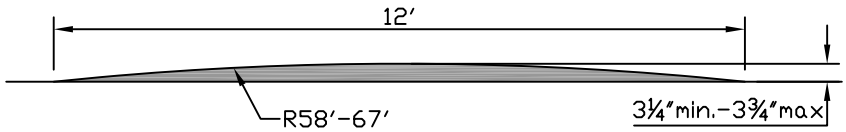

SPEED LUMP CROSS SECTION A-A

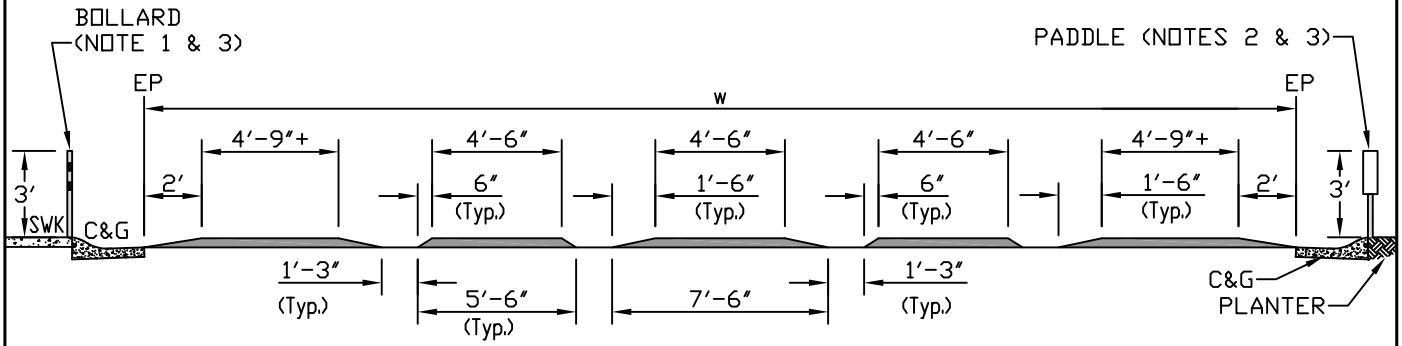

FRONT VIEW

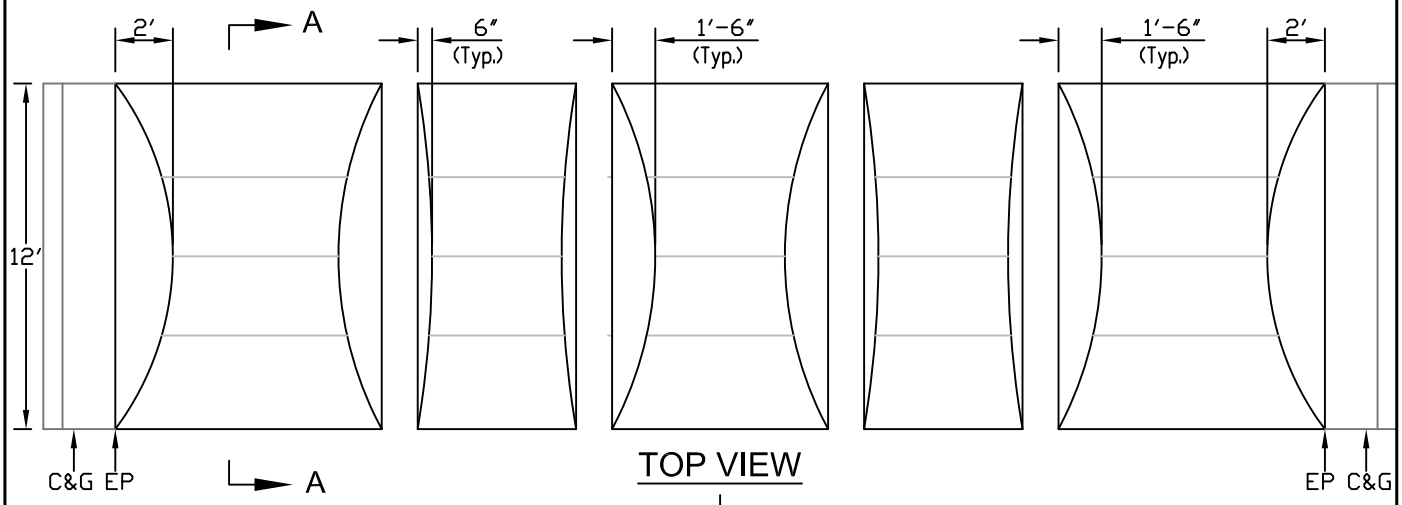

TOP VIEW

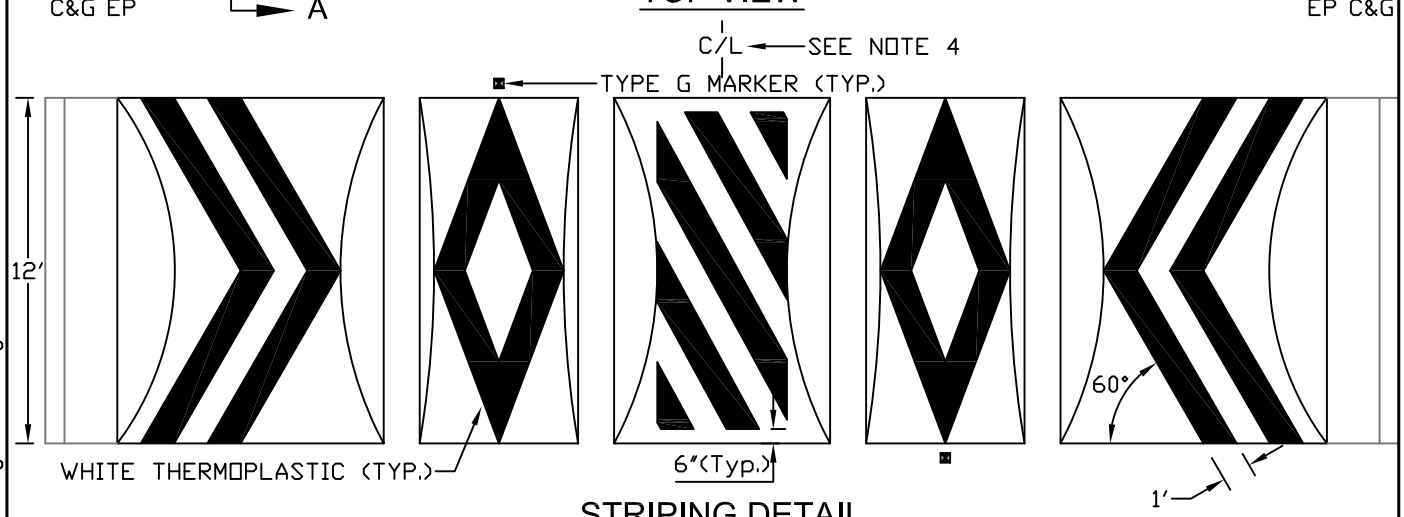

STRIPING DETAIL

LEGEND:

C&G - CURB AND GUTTER
EP - EDGE OF PAVEMENT
SWK - SIDEWALK

NOTES:

1. BOLLARD TO BE INSTALLED ON SIDEWALKS WITH ROLLED CURBS. SEE CITY STANDARD DWG. NO. T-230.
2. PADDLES TO BE INSTALLED ON PLANTER/DIRT WITH ROLLED CURBS OR UNIMPROVED STREETS. SEE CITY STANDARD DWG. NO. T-210.
3. NO BOLLARD OR PADDLE IS NEEDED WHERE TYPE 2 CURB & GUTTER IS PRESENT.
4. CENTER LUMP ON ROADWAY UNLESS OTHERWISE NOTED BY THE ENGINEER.

REV.	DATE	DESCRIPTION
△		
△		
△		

R:\Utilstds\Transportation\StdDwgs\T-227.dwg

CITY OF SACRAMENTO DEPARTMENT OF TRANSPORTATION	SPEED LUMP DETAIL (D) (w) ≥40'	APPROVED BY: Hector Barrera SCALE: None DATE: 08/31/09 DWG. NO. T-227

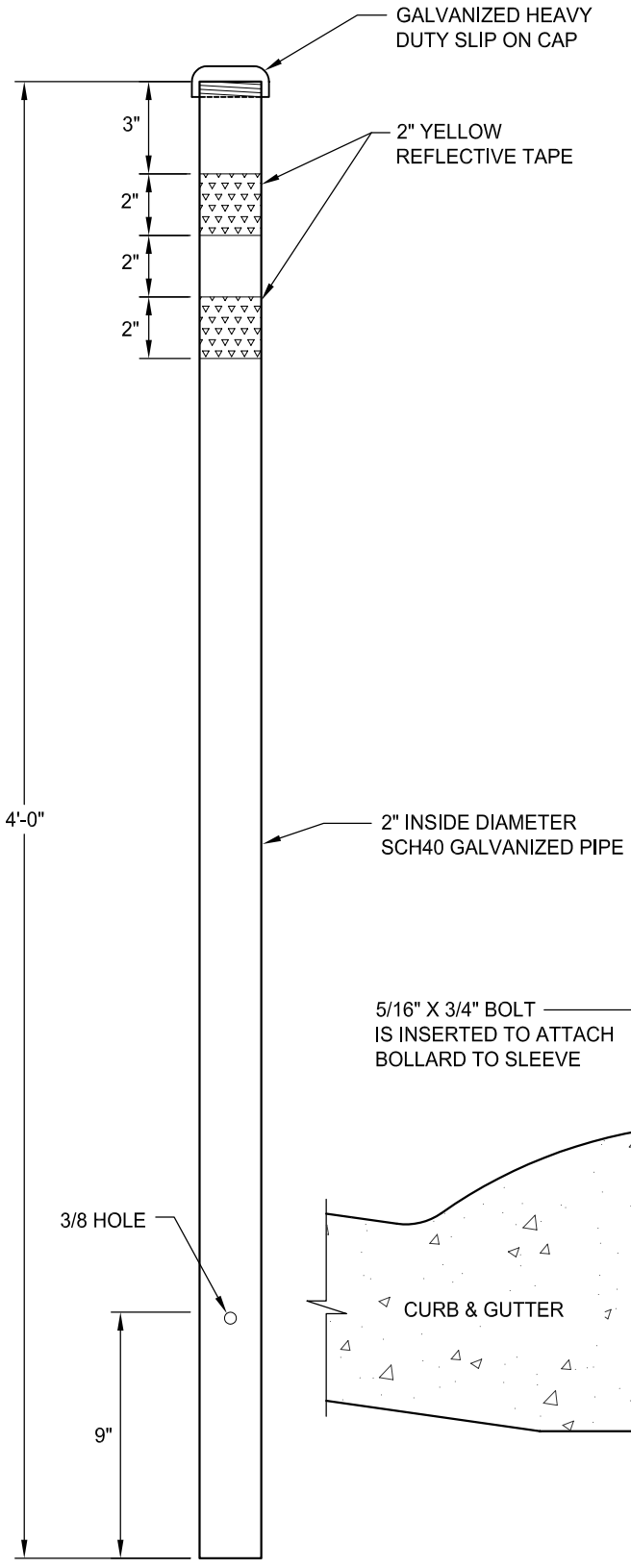

BOLLARD

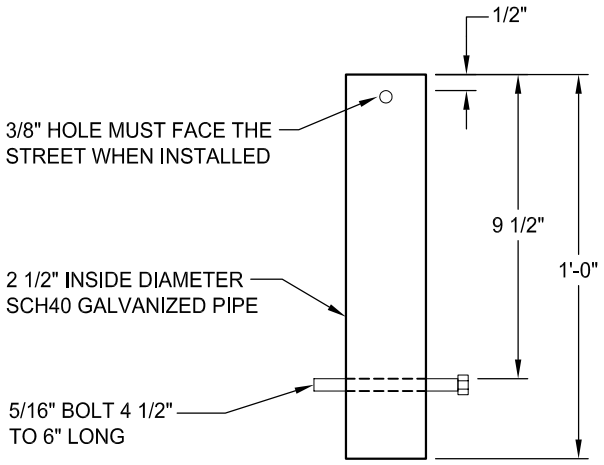

SLEEVE FOR BOLLARD

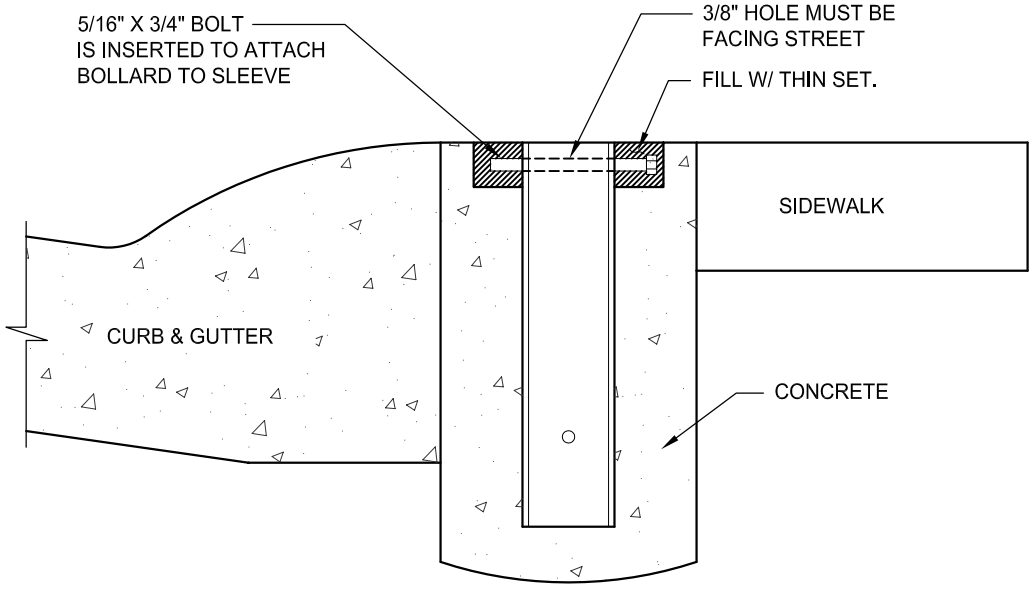

SECTION A

REV.	DATE	DESCRIPTION

CITY OF SACRAMENTO
DEPARTMENT OF TRANSPORTATION

BOLLARD INSTALLATION

APPR'D BY: Nicholas Hernandez NO SCALE
DATE: MAY 2007 DWG. NO. **T - 230**

R:\Utilstds\City_Std_Details\DOT_Civil_Details\T-230

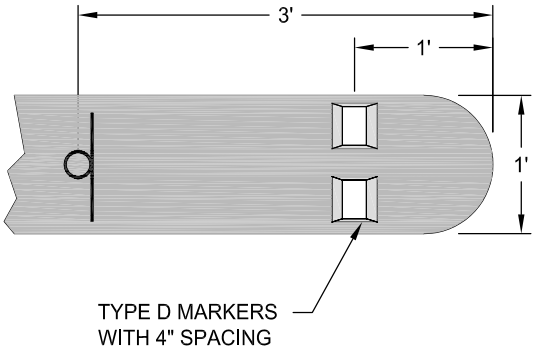

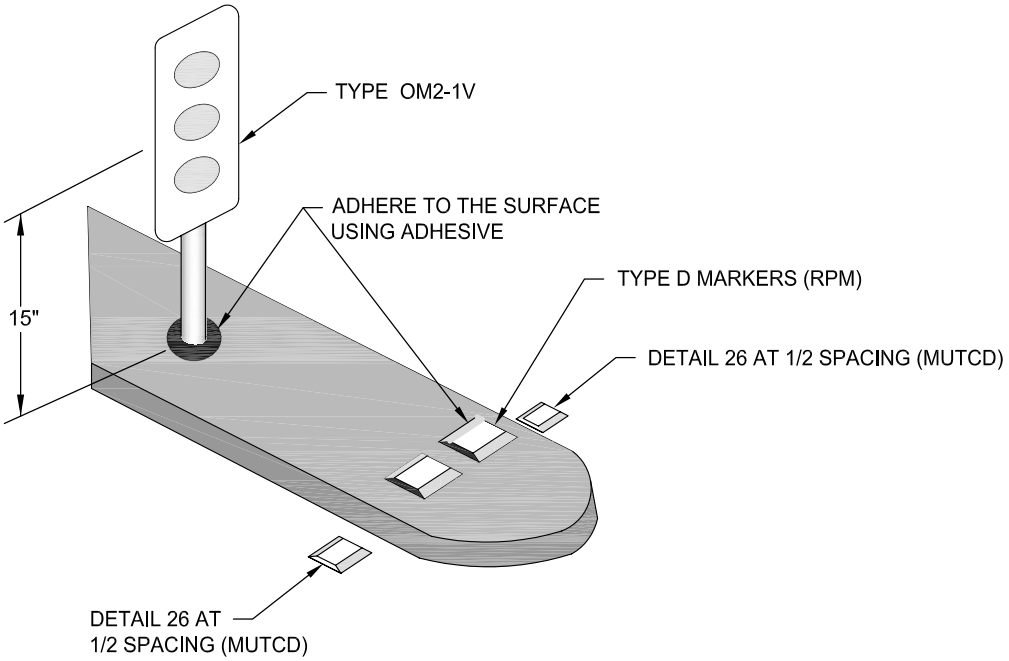

REV.	DATE	DESCRIPTION

CITY OF SACRAMENTO
DEPARTMENT OF TRANSPORTATION

1 FT MEDIAN ISLAND
WITH REFLECTORS

APPR'D BY: Nicholas Thomas NO SCALE
DATE: MAY 2007 DWG. NO. **T - 250**

R:\Utilstds\City_Std_Details\DOT_Civil_Details\T-250

A ISLAND WIDTH	2'	3'	4'
B RADIUS	1'	1.5'	2'
C (NO. OF RPM'S)	3	4	5
D	39"	42"	45"
E R7 (SIZE)	12x24	12x24	24x30
F OBJECT MARKER	OM2-1H	OM2-1H	OM2-1H

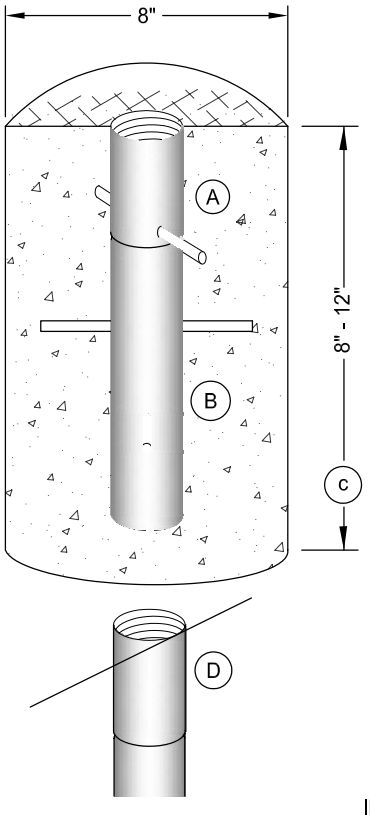

NOTES:

(A) 2" GALVANIZED THREADED PIPE COUPLING, SECURED TO 2" PIPE BY THREADS AND ATTACHED TO SUBTERRANEAN PORTION BY EITHER A BOLT OR TACK WELDING.

(B) 2" SCHEDULE 40 GALVANIZED PIPE NOT LESS THAN 8" LONG OR MORE THAN 12" LONG, CROSSPINNED WITH EITHER 5/16" x 6" BOLTS OR 5/16" x 6" REBAR.

(C) EXCAVATED PORTION TO BE FILLED WITH PORTLAND CEMENT, MINIMUM 4 BAG MIX, SMOOTH FINISHED AT GRADE.

(D) GRADE: WHERE AN UNEQUAL GRADE IS ENCOUNTERED, THE HIGHER PORTION OF THE 2" PIPE COUPLING SET AT GRADE IS ACCEPTABLE.

DETAIL A

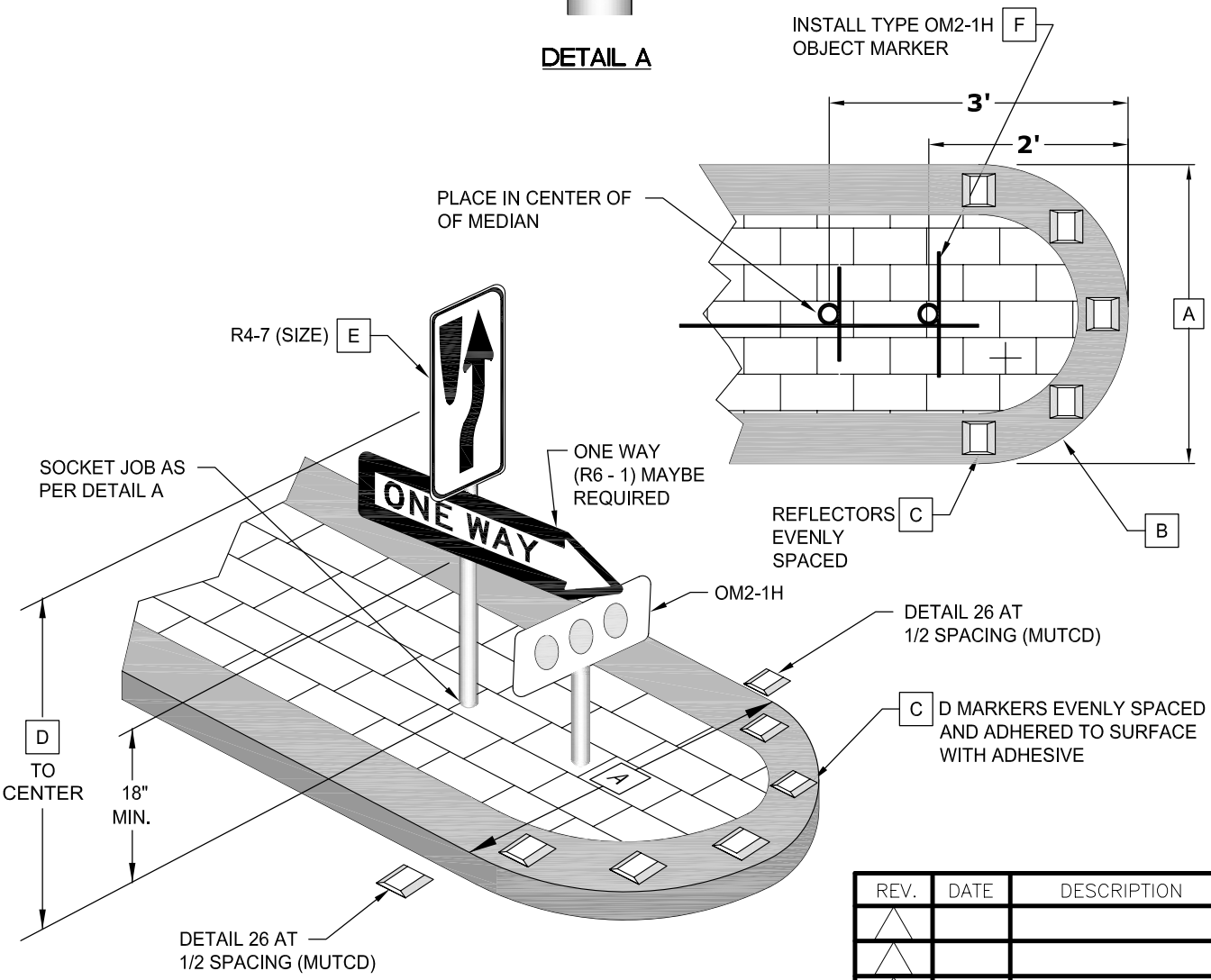

REV.	DATE	DESCRIPTION

CITY OF SACRAMENTO
DEPARTMENT OF TRANSPORTATION

MEDIAN ISLANDS WITH SOCKET JOB & RPM'S

APPR'D BY: Nicholas Hernandez NO SCALE
DATE: MAY 2007 DWG. NO. **T - 260**

R:\Utilstds\City_Std_Details\DOT_Civil_Details\T-260

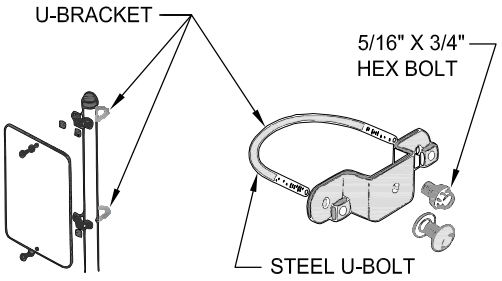

SINGLE 2" ID U-BRACKET CLAMP FOR CENTERMOUNT

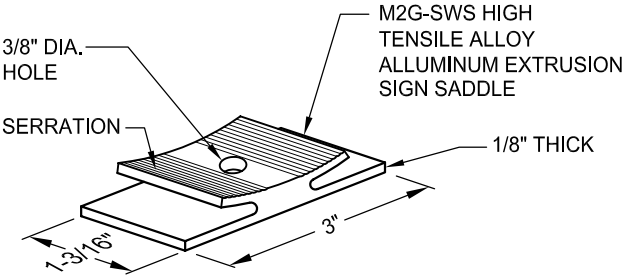

2" ALUMINUM PIPE SADDLE

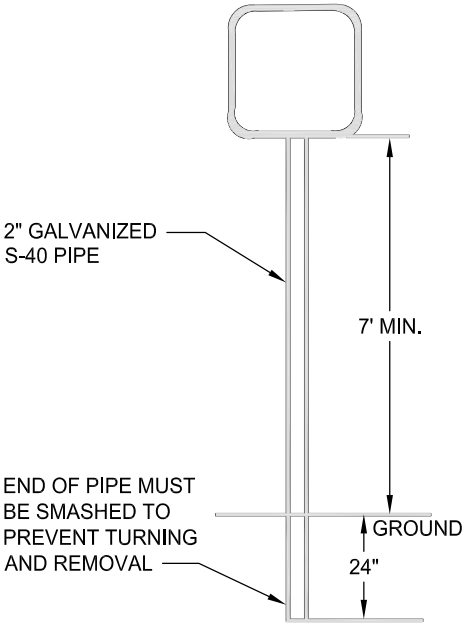

STANDARD SIGN CENTERMOUNT

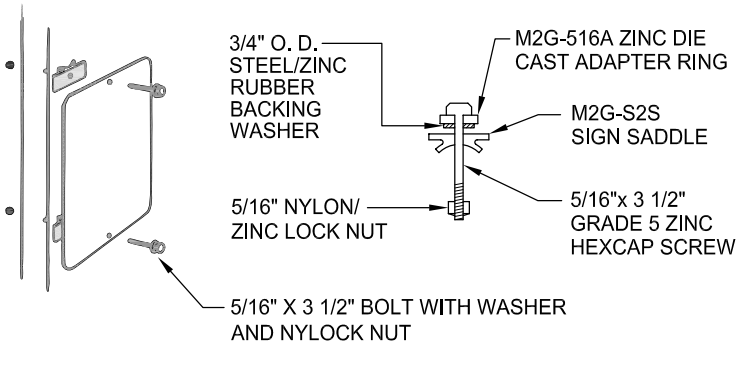

2" PIPE SADDLE FOR CENTERMOUNT

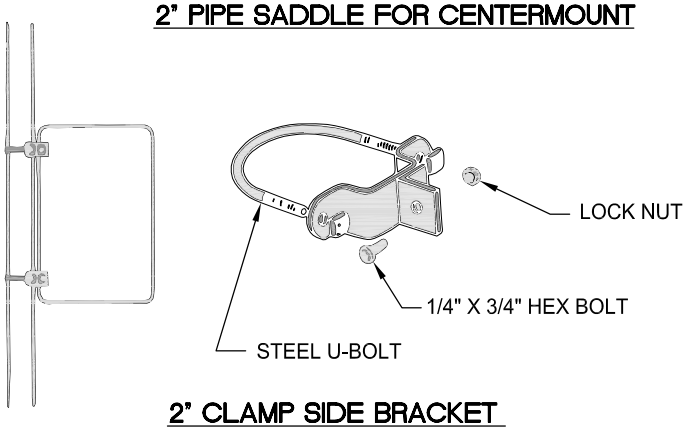

2" CLAMP SIDE BRACKET FOR SIDEMOUNT

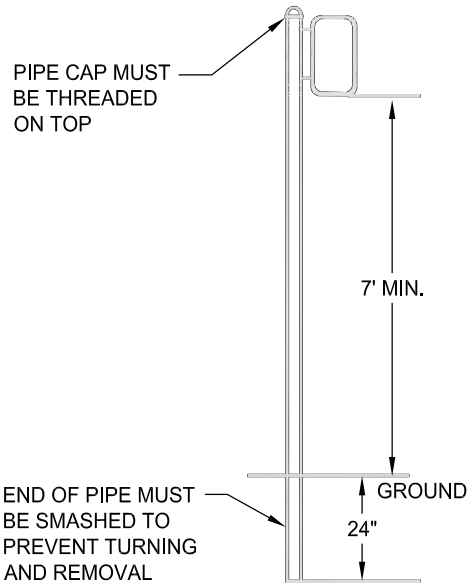

STANDARD SIGN SIDEMOUNT

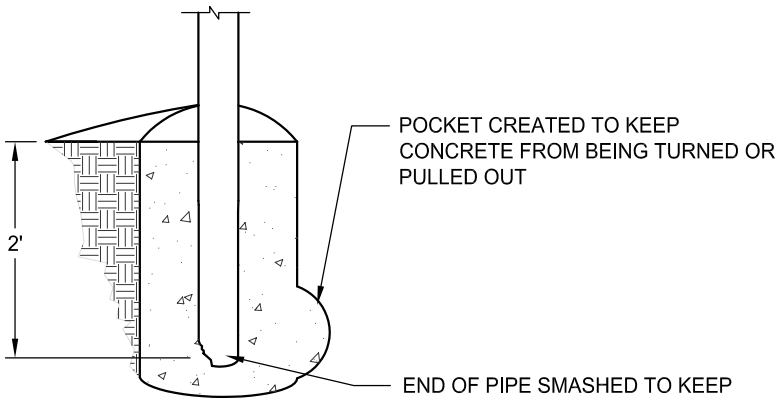

NOTE:
ALL FASTENERS AND HARDWARE GALVANIZED, UNLESS OTHERWISE NOTED

REV.	DATE	DESCRIPTION

R:\Utilstds\City_Std_Details\DOT_Civil_Details\T-270

CITY OF SACRAMENTO
DEPARTMENT OF TRANSPORTATION

STANDARD 2" PIPE SIGN MOUNTING

APPR'D BY: Nicholas Thomas NO SCALE
DATE: MAY 2007 DWG. NO. **T - 270**

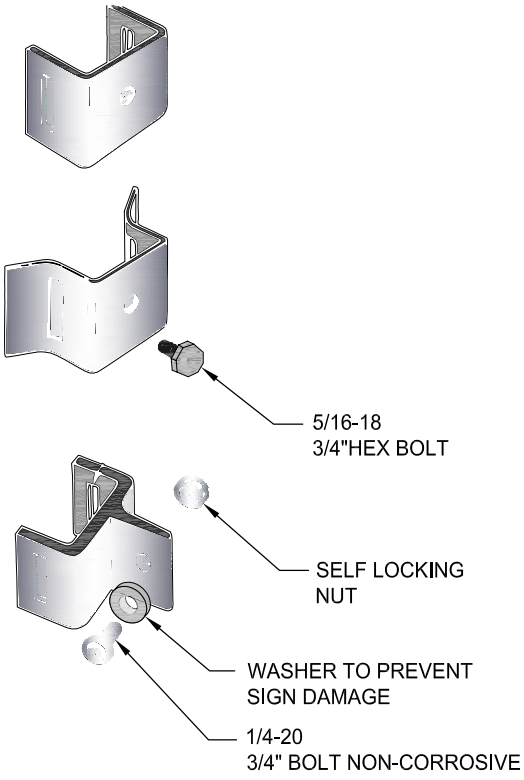

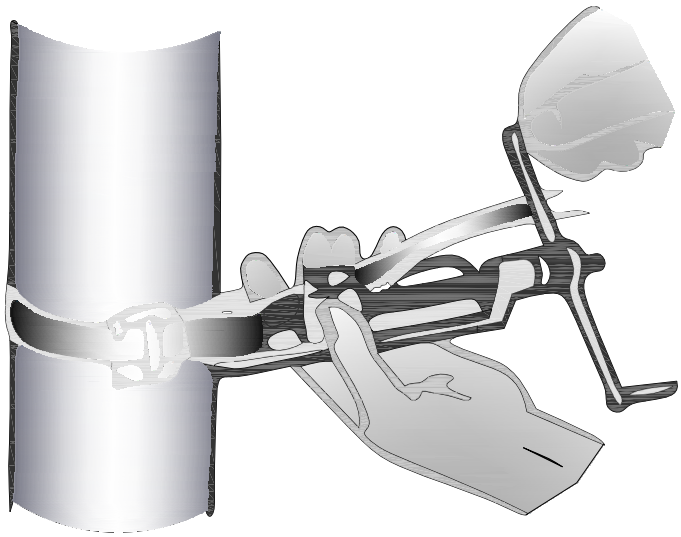

SIGN BLANK SHALL NOT BE LESS THAN
.080 INCHES THICK ALUMINUM (5052-H38)

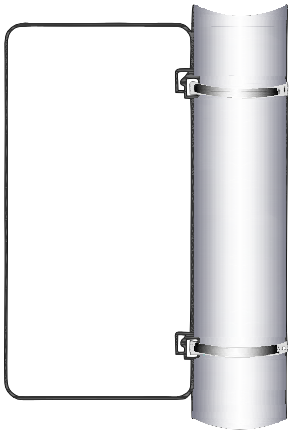

NOTE:
7' MIN. CLEARANCE FROM BOTTOM
OF SIGN TO GROUND

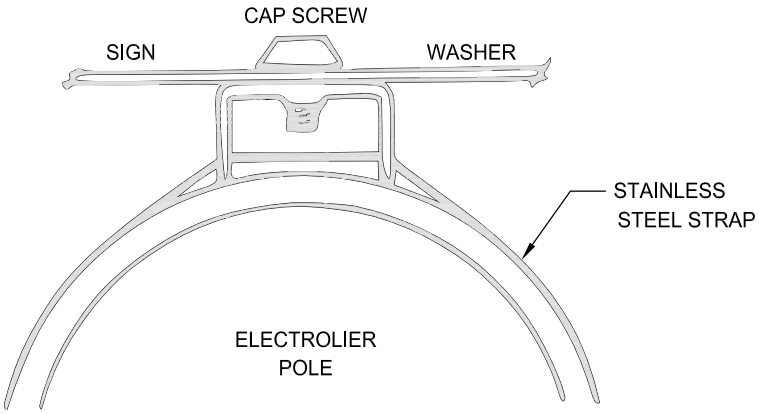

HEAVY DUTY 3/4" X .032" STAINLESS STEEL STRAP
HEAVY DUTY 3/4" STAINLESS STEEL BUCKLE FOR .032" STRAP
BUCKLE INSTALLED PER MANUFACTURER INSTRUCTIONS

TOP VIEW

REV.	DATE	DESCRIPTION

CITY OF SACRAMENTO
DEPARTMENT OF TRANSPORTATION

STANDARD ELECTROLIER
SIGN MOUNTING

APPR'D BY: Nicholas Thomas NO SCALE
DATE: MAY 2007 DWG. NO. **T - 280**

R:\Utilstds\City_Std_Details\DOT_Civil_Details\T-280

R:\Utilstds\City_Std_Details\DOT_Civil_Details\T-290

CITY OF SACRAMENTO
DEPARTMENT OF TRANSPORTATION

STANDARD STREET NAME SIGN

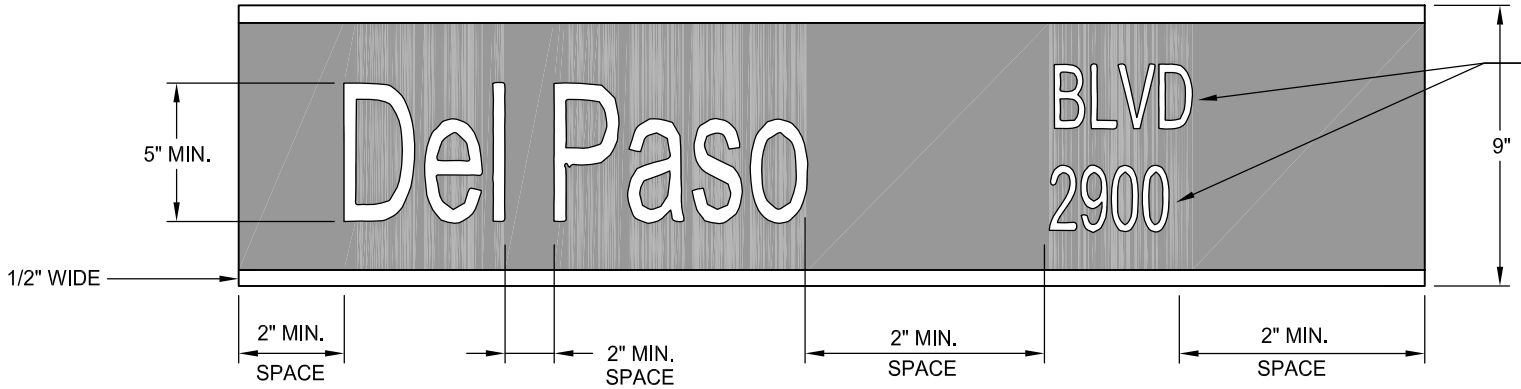

NOTE:
- BLANK .125" THICKNESS
- GREEN BACKGROUND WITH WHITE LETTERS
- TYPE NINE SHEETING

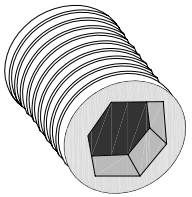

SET SCREW DETAIL

SNS LETTER PER LBANKS

24"	1 TO 4
30"	5 TO 6
36"	7 TO 8
42"	9 TO 10
48"	11 TO 13

NOTE:
SPACE IS THE SAME AS LETTER BLOCK REQUIRED ON ALL SIGNS

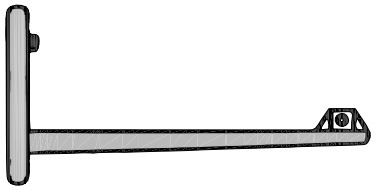

HEAVY DUTY 3/4" X .032" STAINLESS STEEL STRAP
HEAVY DUTY 3/4" STAINLESS STEEL BUCKLE FOR .032" STRAP

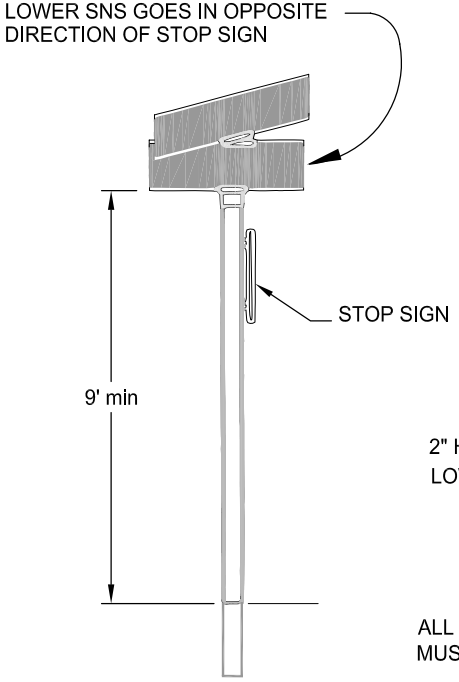

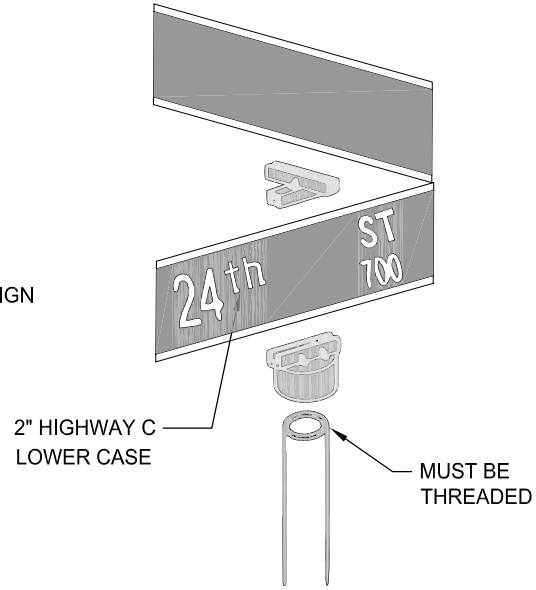

ALL HARDWARE IS STAINLESS STEEL. ALL SET SCREWS MUST BE STAINLESS STEEL TAMPER PROOF DESIGN.

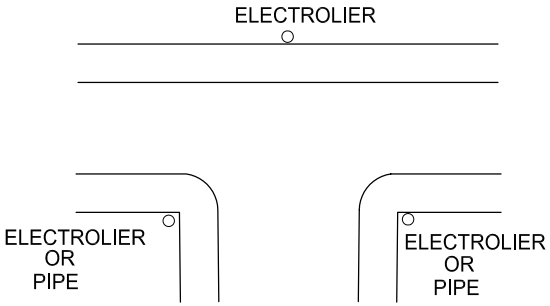

REV.	DATE	DESCRIPTION

APPR'D BY: Nicholas Thistler
DATE: MAY 2007
NO SCALE
DWG. NO. **T - 290**

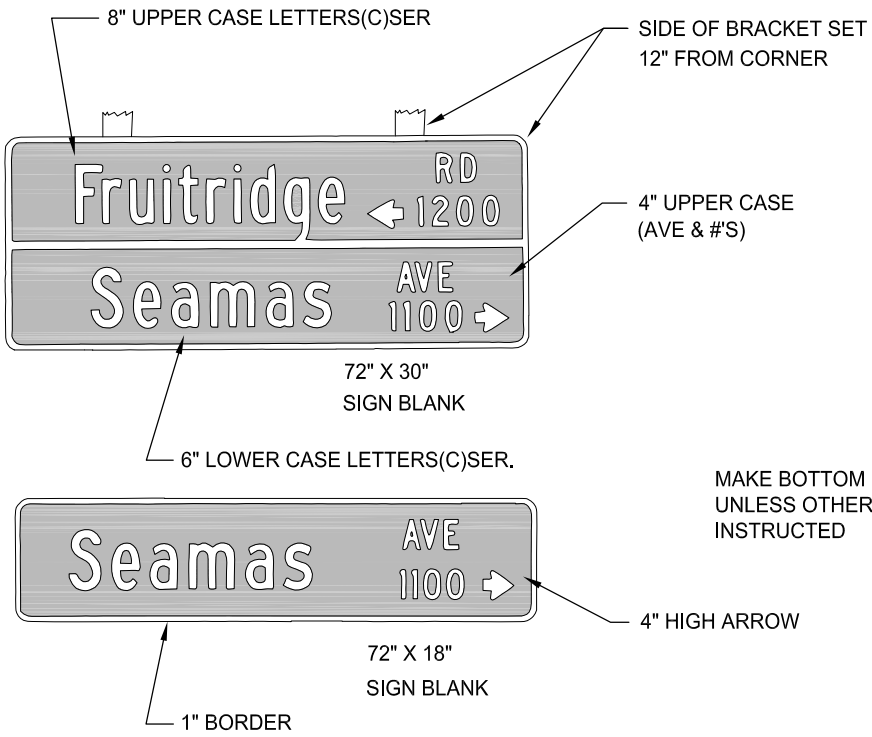

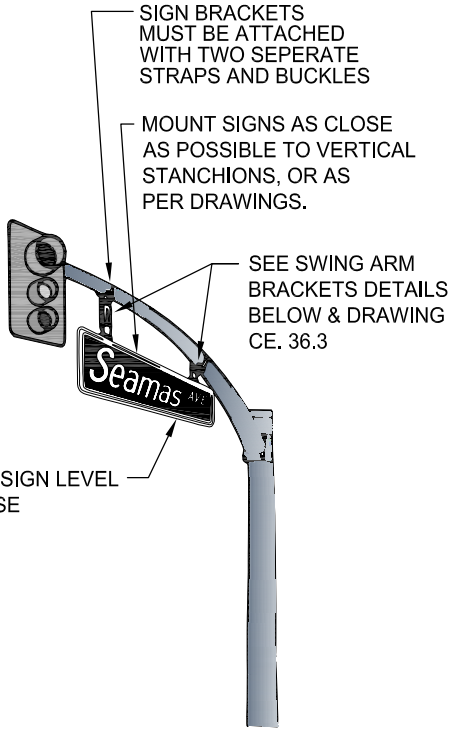

NOTES:

- 1" BRACE ON BACK (HORIZONTAL)
- GREEN BACKGROUND WITH WHITE LETTERS USING TYPE IX RETROREFLECTIVE SHEETING
- .080" ALUMINUM 5052 H38 SIGN BLANK

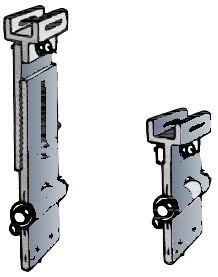

SWING ARM BRACKETS

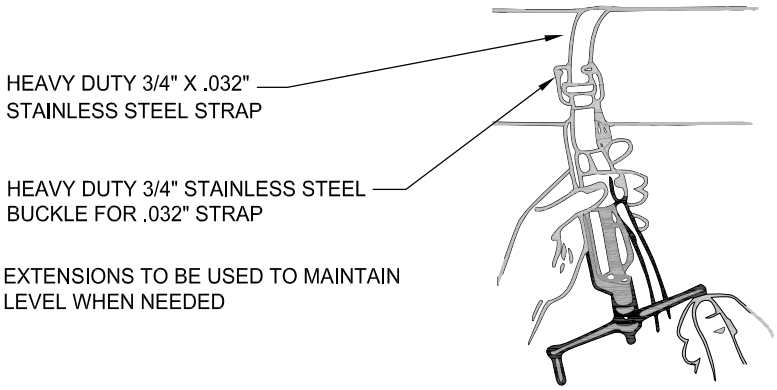

REV.	DATE	DESCRIPTION

CITY OF SACRAMENTO
DEPARTMENT OF TRANSPORTATION

STANDARD OVERHEAD
STREET NAME SIGN

APPR'D BY: Nicholas Hernandez NO SCALE
DATE: MAY 2007 DWG. NO. **T - 301**

R:\Utilstds\Transportation\StdDwgs\T-301

EXAMPLE

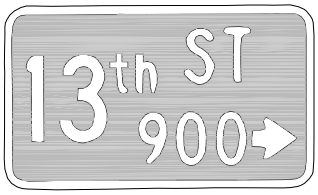

30" x 18"
SIGN BLANK

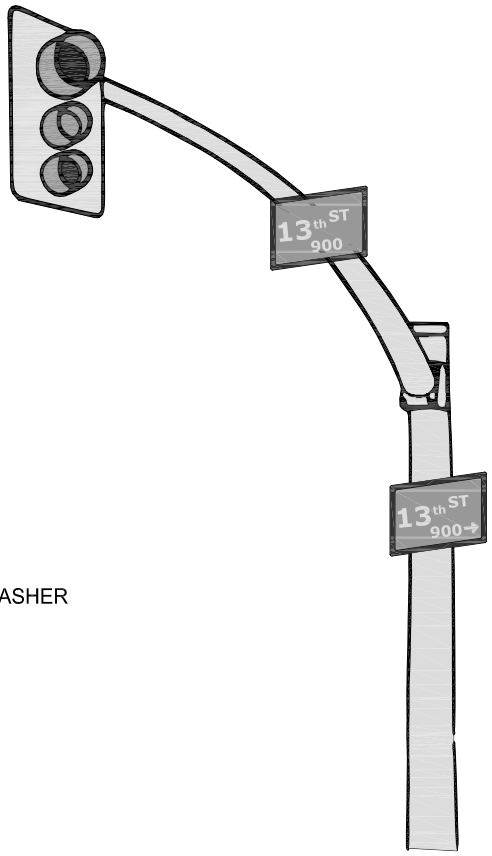

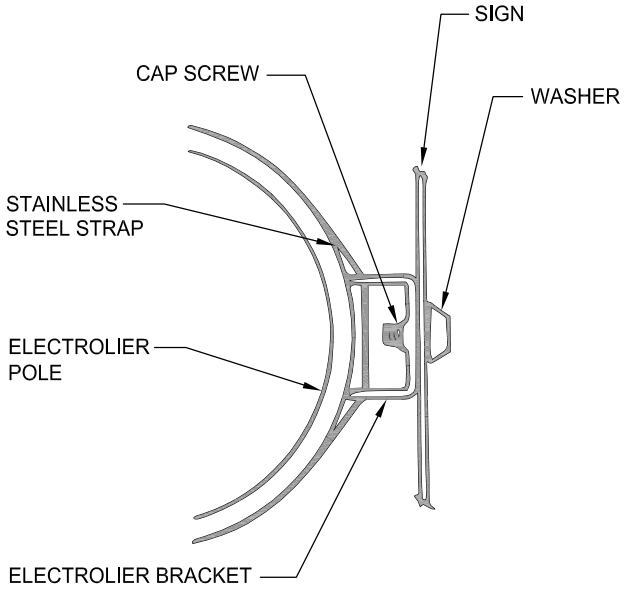

NOTE:
THIS TYPE OF SIGN MOUNT IS TO BE USED WHEN SPECIFIED BY THE ENGINEER

ELECTROLIER SIGN BRACKET

DIRECT SIGN MOUNTING FOR SMALL SIGNS

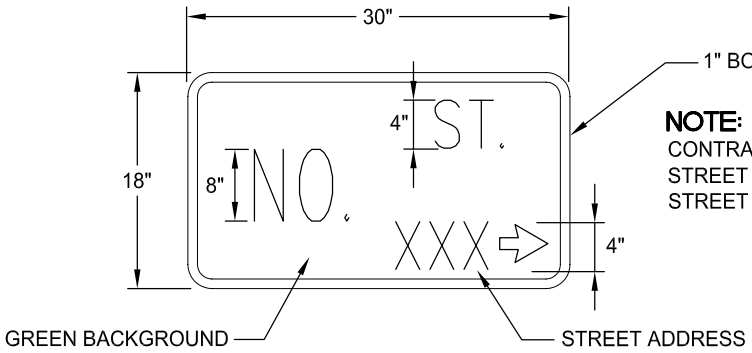

NOTE:
CONTRACTOR SHALL VERIFY EXACT STREET ADDRESS FOR PLACEMENT ON STREET NAME SIGN SHOWN.

DETAIL G7-A

REV.	DATE	DESCRIPTION

CITY OF SACRAMENTO
DEPARTMENT OF TRANSPORTATION

STANDARD OVERHEAD
STREET NAME (SMALL SIGNS)

APPR'D BY: Nicholas Thomas NO SCALE
DATE: MAY 2007 DWG. NO. **T - 302**

R:\Utilstds\Transportation\StdDwgs\T-302

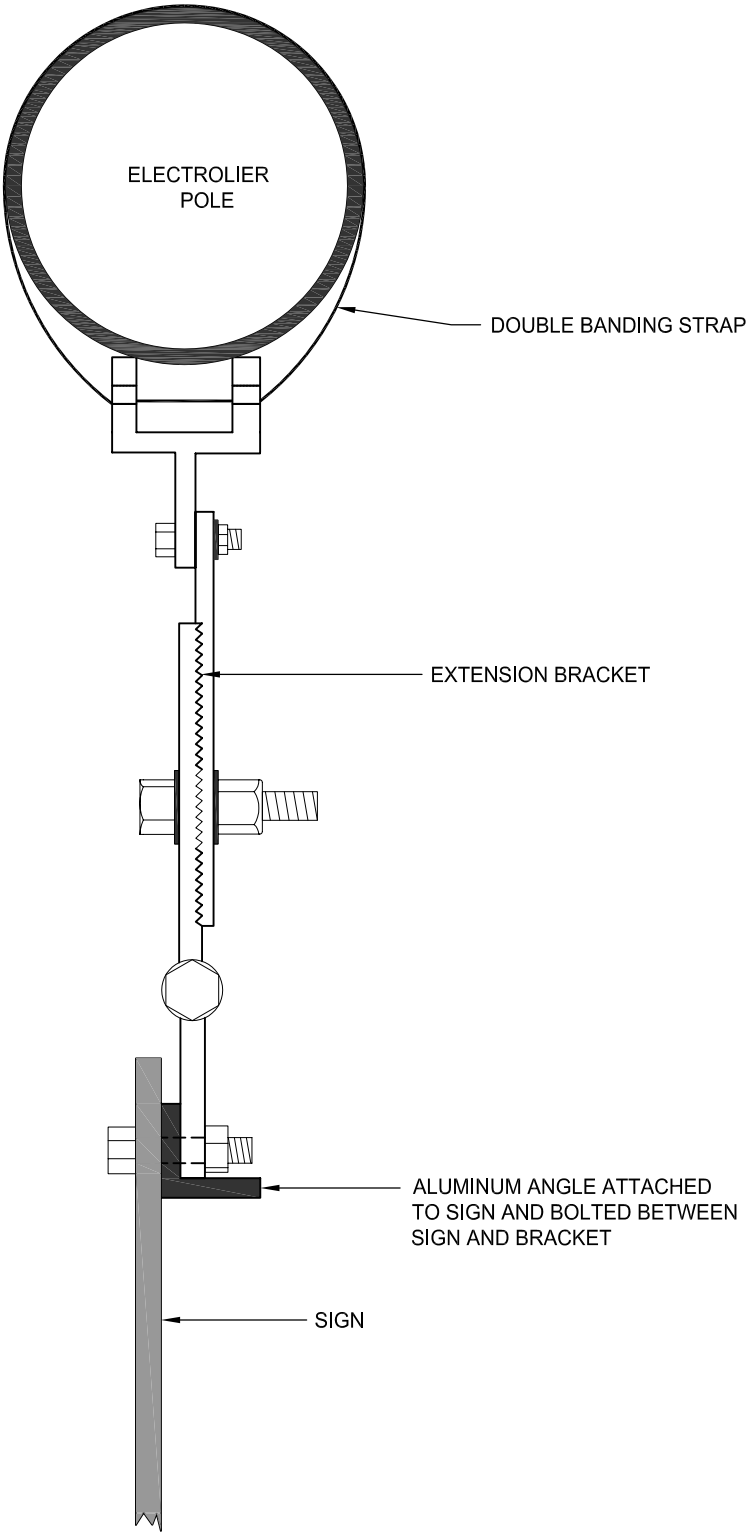

BRACKET SIDE VIEW

REV.	DATE	DESCRIPTION

CITY OF SACRAMENTO
DEPARTMENT OF TRANSPORTATION

OVERHEAD STREET NAME SIGN
SWING ARM BRACKET

APPR'D BY: Nicholas Thomas NO SCALE
DATE: MAY 2007 DWG. NO. **T - 303**

R:\Utilstds\City_Std_Details\DOT_Civil_Details\T-303

R:\Utilstds\City_Std_Details\DOT_Civil_Details\T-310

CITY OF SACRAMENTO
DEPARTMENT OF TRANSPORTATION

METER PIPES
DETAIL

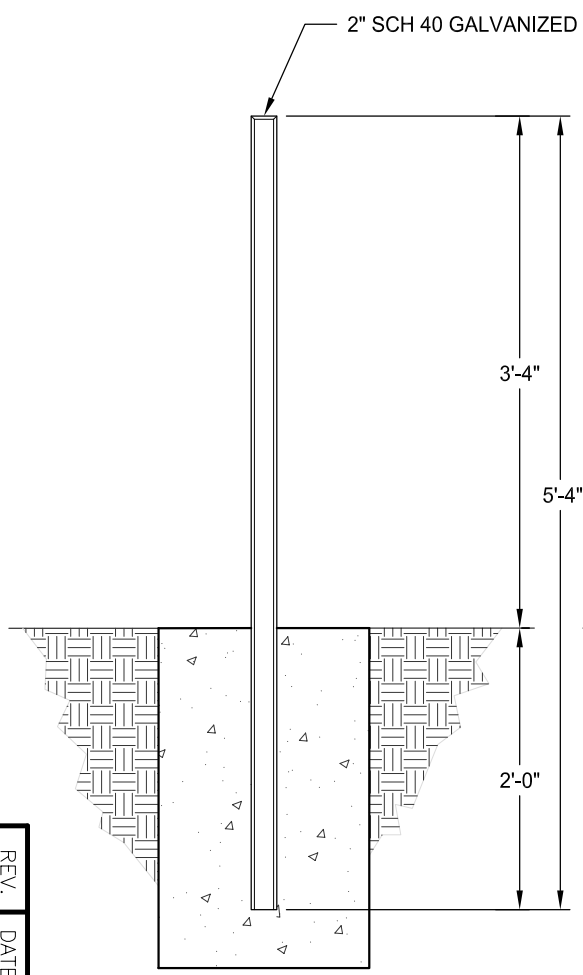

DIRT

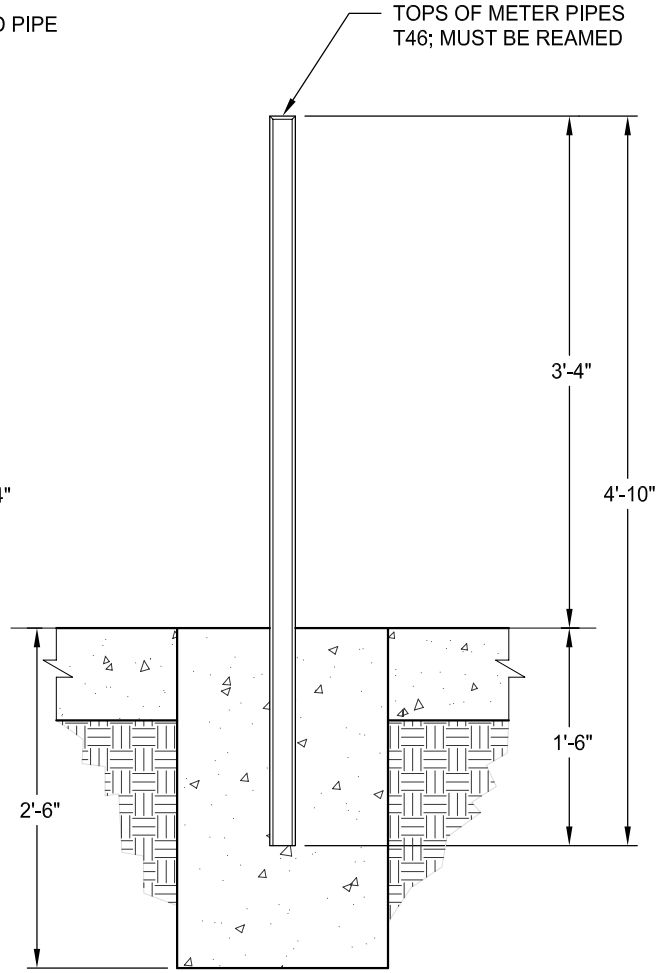

CONCRETE

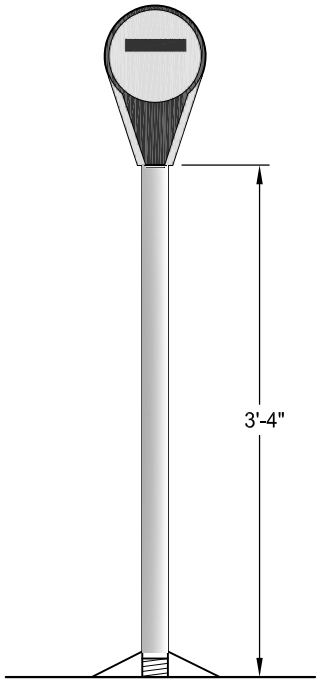

THREADED

NOTE:

ALL METER PIPES MUST BE AT A HEIGHT OF 40" ABOVE THE GROUND

REV.	DATE	DESCRIPTION

APPR'D BY: Nicholas Hensley
DATE: MAY 2007
NO SCALE
DWG. NO. T - 310

R:\Utilstds\City_Std_Details\DOT_Civil_Details\T-320

CITY OF SACRAMENTO
DEPARTMENT OF TRANSPORTATION

METER PIPE FLANGE JOB

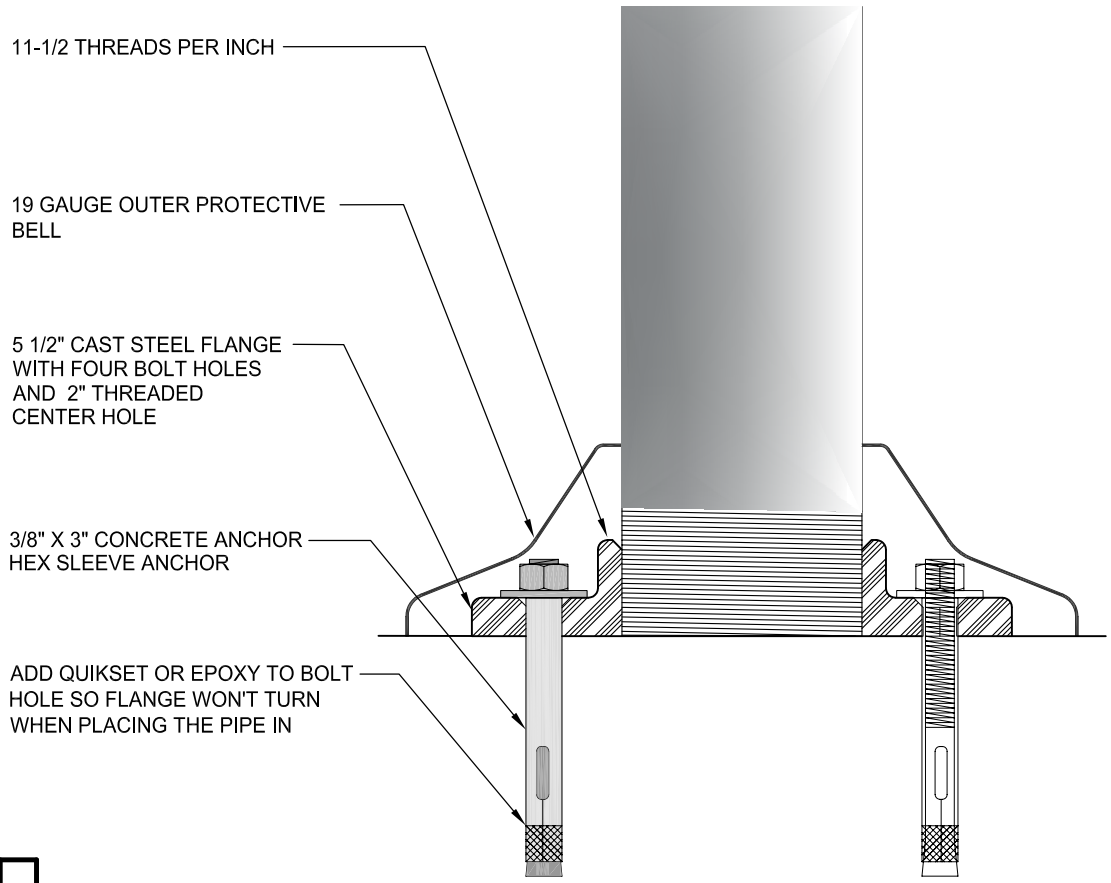

SECTION A-A

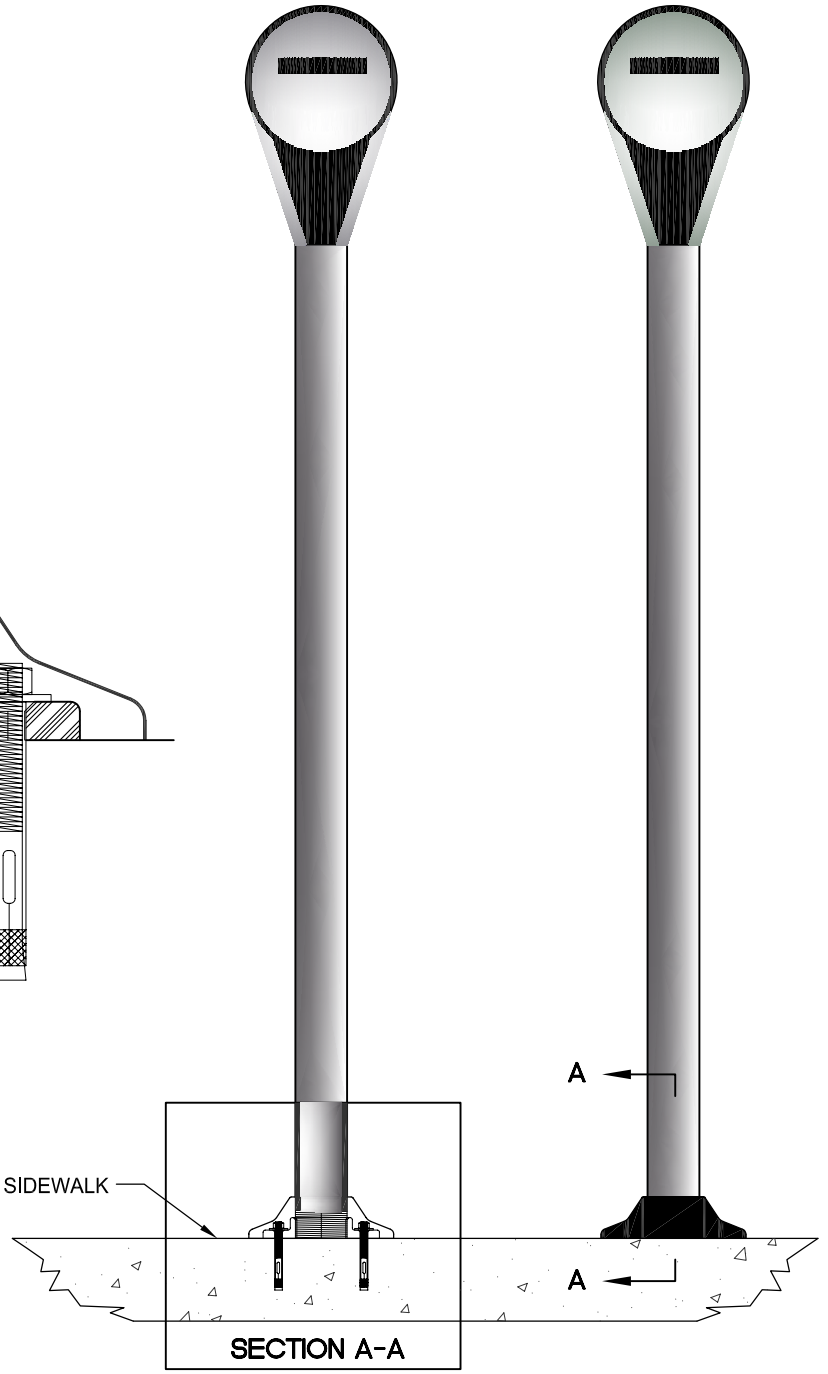

SECTION A-A

NOTE:

FLANGE JOBS ARE USED FOR HALLOW SIDEWALKS IN AND AROUND DOWNTOWN AREA FOR PARKING METERS.

REV.	DATE	DESCRIPTION

APPR'D BY: Nicholas Thomas

DATE: MAY 2007

NO SCALE

DWG. NO. **T - 320**

R:\Utilstds\City_Std_Details\DOT_Civil_Details\T-330

CITY OF SACRAMENTO
DEPARTMENT OF TRANSPORTATION

20' ALLEY CLOSURE WITH 4 BOLLARDS

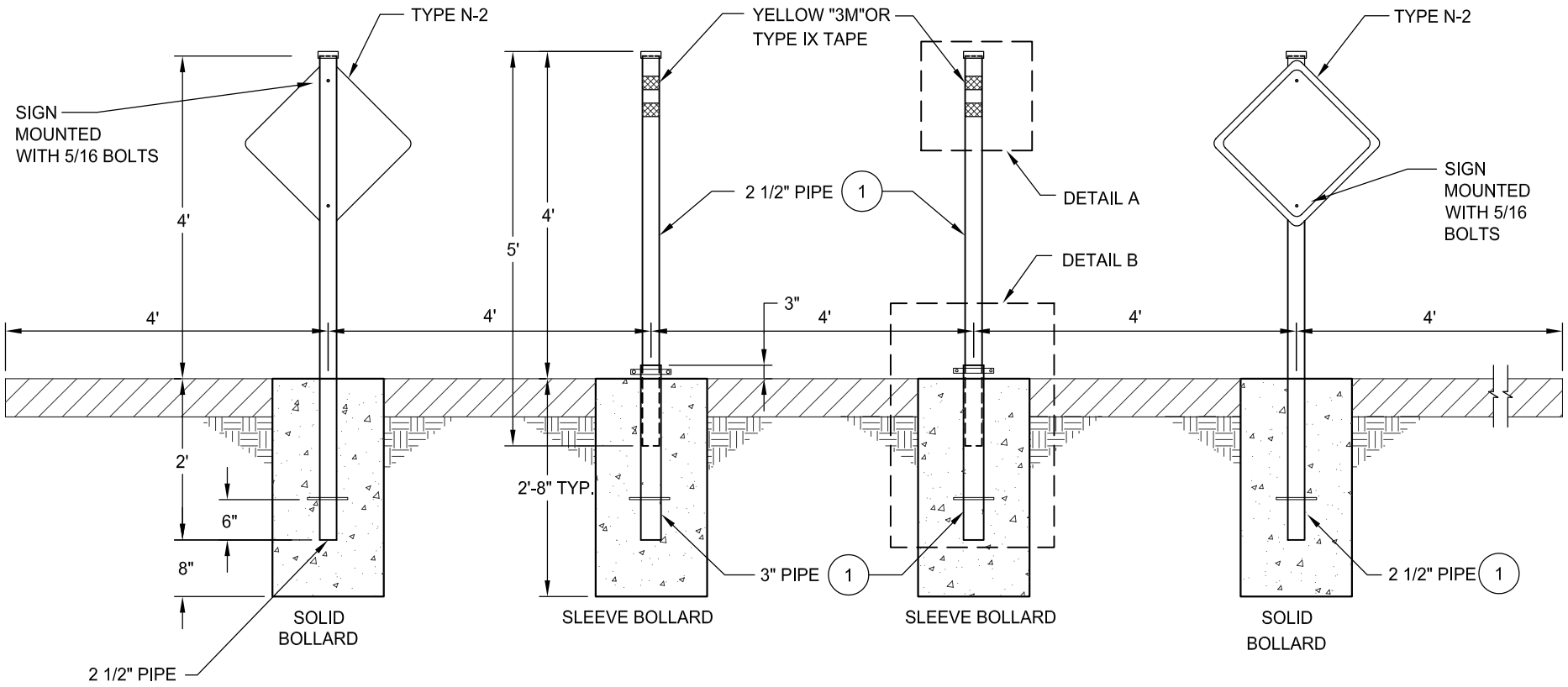

NOTE:

(1) SCHEDULE 40 GALVANIZED STEEL PIPE

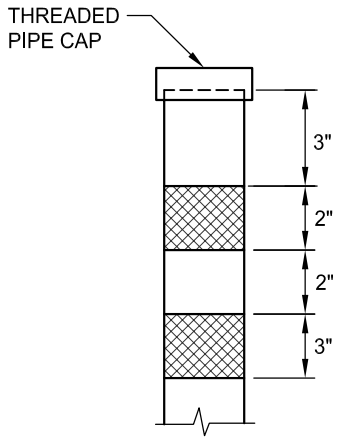

DETAIL A

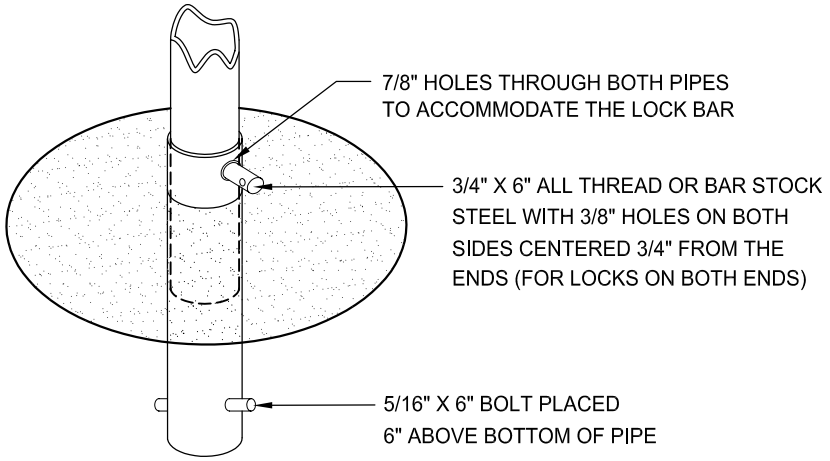

DETAIL B

REV.	DATE	DESCRIPTION

APPR'D BY: Nicholas Hensley
DATE: MAY 2007
NO SCALE
DWG. NO. T - 330

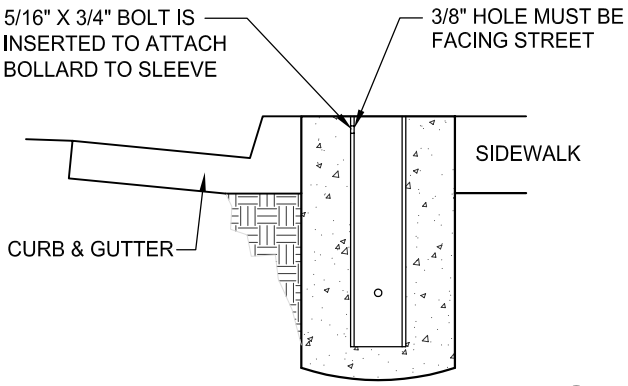

SLEEVE FOR BOLLARD

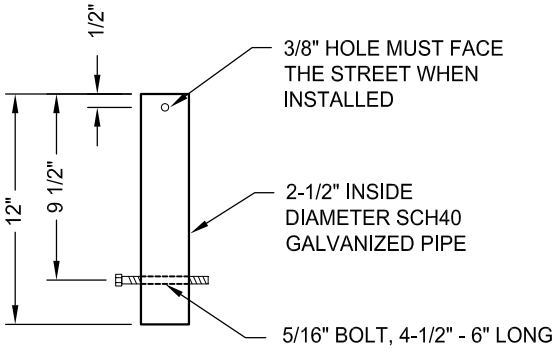

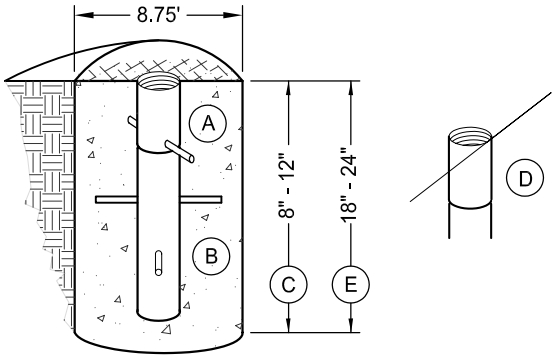

(A) 2" GALVANIZED THREADED PIPE COUPLING, SECURED TO 2" PIPE BY THREADS AND ATTACHED TO SUBTERRANEAN PORTION BY A BOLT THAT MUST PENITRATE THROUGH PIPE AND COUPLING.

(B) 2" SCHEDULE 40 GALVANIZED PIPE NOT LESS THAN 8" LONG OR MORE THAN 12" LONG, CROSSPINNED WITH EITHER 5/16" x 6" BOLTS OR 6"- #3 REBAR.

(C) EXCAVATED PORTION TO BE FILLED WITH PORTLAND CEMENT, MINIMUM 4 BAG MIX, SMOOTH FINISHED AT GRADE IN SIDEWALK, A.C. OR IMPROVED SURFACE.

(D) GRADE: WHERE AN UNEQUAL GRADE IS ENCOUNTERED, THE HIGHER PORTION OF THE 2" PIPE COUPLING SET AT GRADE IS ACCEPTABLE.

(E) IN NATIVE SOIL STANCHION HEIGHT UP TO 4' USE 18" SOCKET STANCHION HEIGHT OVER 4" USE 24" SOCKET

SLEEVE SOCKET

FOR BOLLARD ONLY
SEE DETAIL T-23

THREADED SOCKET

FOR SIGN PIPE ONLY

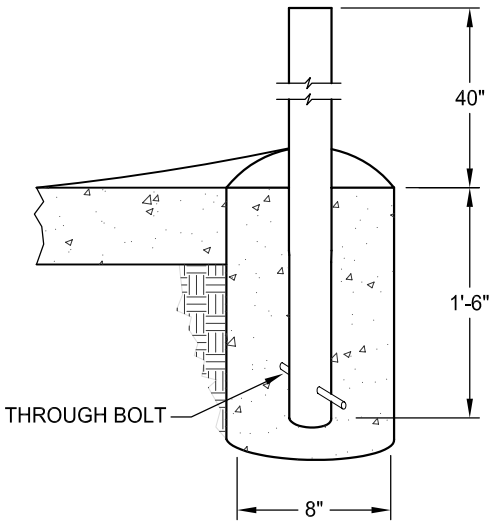

METER PIPE INSTALLATION

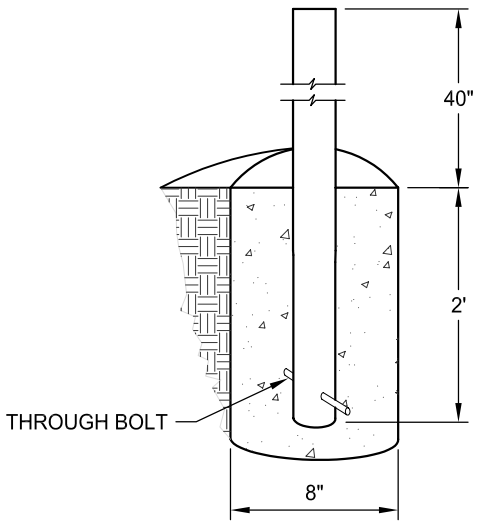

METER PIPE NATIVE INSTALLATION

REV.	DATE	DESCRIPTION

CITY OF SACRAMENTO
DEPARTMENT OF TRANSPORTATION

STANDARD BOLLARD & METERED PIPE FOOTING

APPR'D BY: Nicholas Thomas NO SCALE
DATE: MAY 2007 DWG. NO. T - 340

R:\Utilstds\City_Std_Details\DOT_Civil_Details\T-340

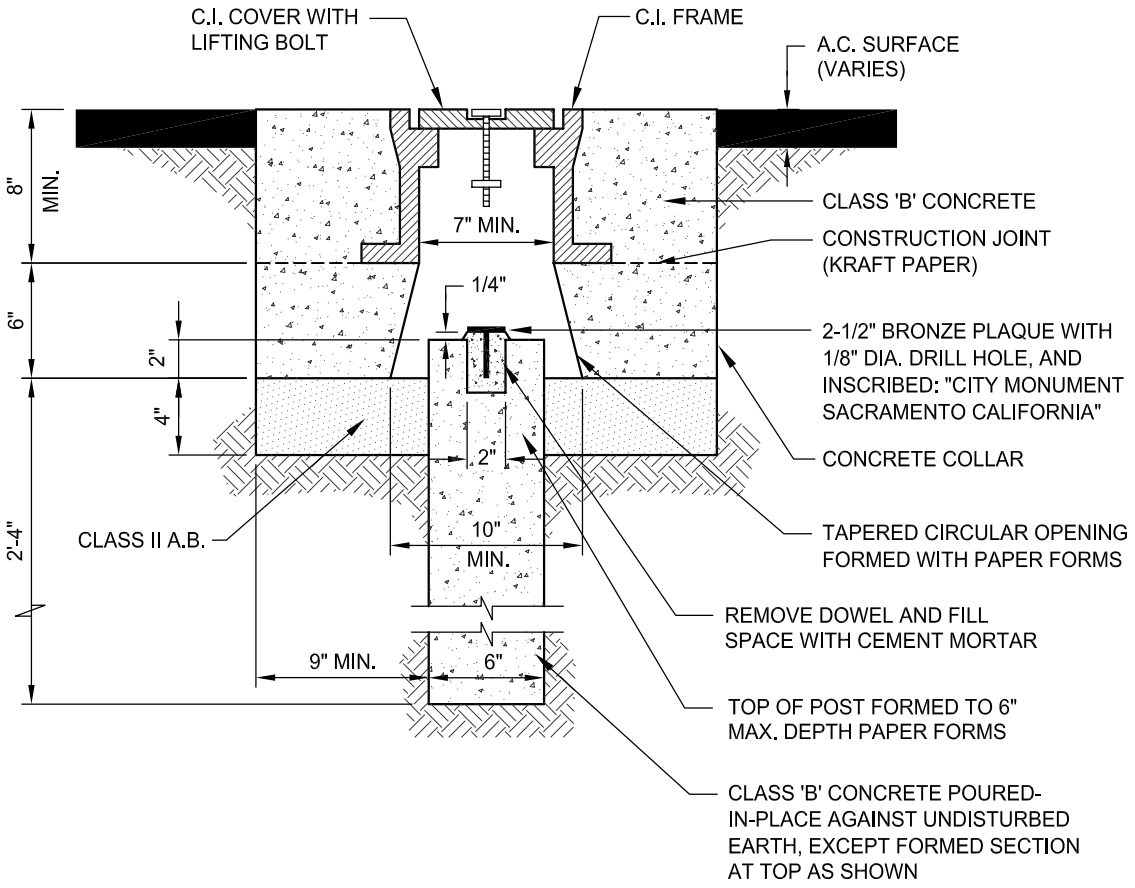

NOTES:

1. MONUMENT COVERS AND FRAMES SHALL BE FORNI "IRON SIDES", TYPE 80-60-03; PHOENIX, TYPE P-2001, OR APPROVED EQUAL. EACH COVER SHALL BE GROUND OR OTHERWISE FINISHED SO THAT IT WILL FIT ITS FRAME WITHOUT ROCKING. BRONZE PLAQUE NOT TO EXTEND MORE THAN 1/4" ABOVE CONCRETE BASE. MONUMENT TO BE SET BY A REGISTERED LAND SURVEYOR OR PROFESSIONAL ENGINEER.

2. UNLESS OTHERWISE SPECIFIED, 4" MIN. CLEARANCE OF CONCRETE OVER WATER MAINS.

3. ALL CONCRETE IN CONFORMANCE WITH SEC. 10 OF STANDARD SPECIFICATIONS.

REV.	DATE	DESCRIPTION

R:\Utilstds\City_Std_Details\DOT_Civil_Details\T-350

CITY OF SACRAMENTO
DEPARTMENT OF TRANSPORTATION

CONCRETE SURVEY MONUMENT

APPR'D BY: Nicholas Thomas NO SCALE
DATE: MAY 2007 DWG. NO. T - 350

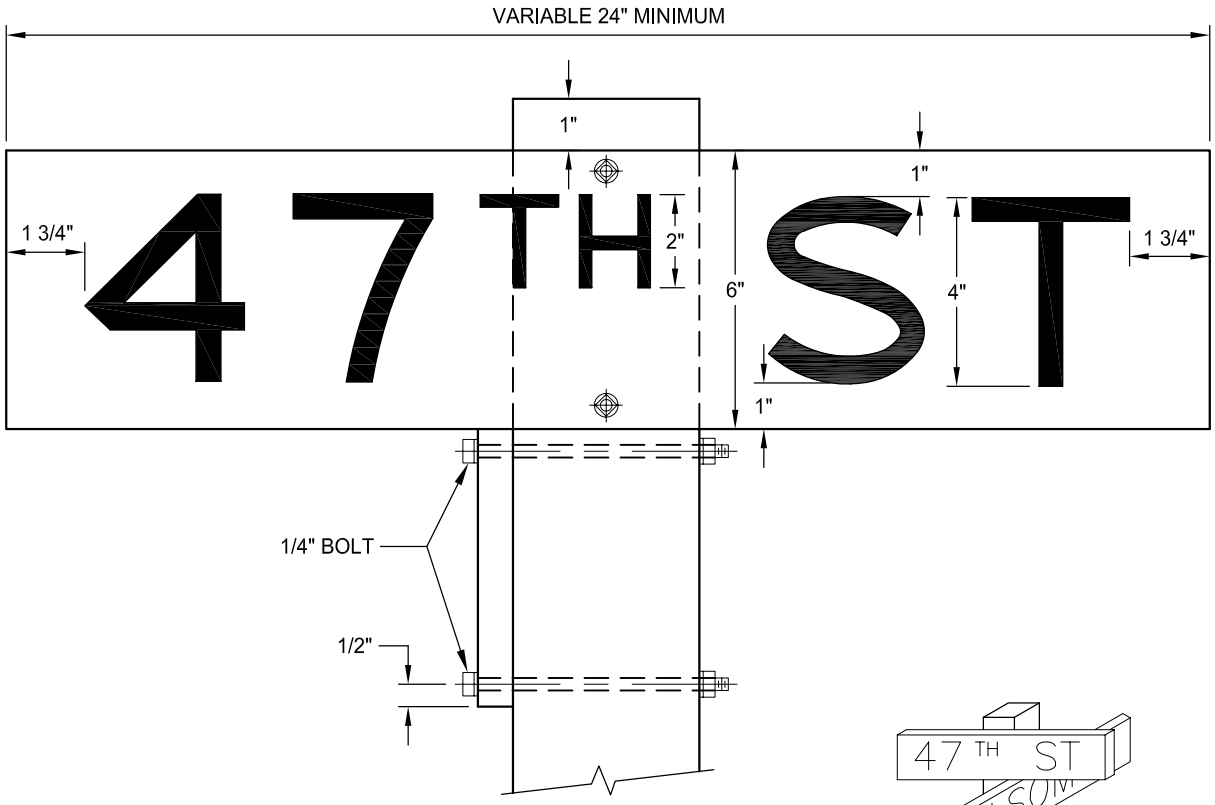

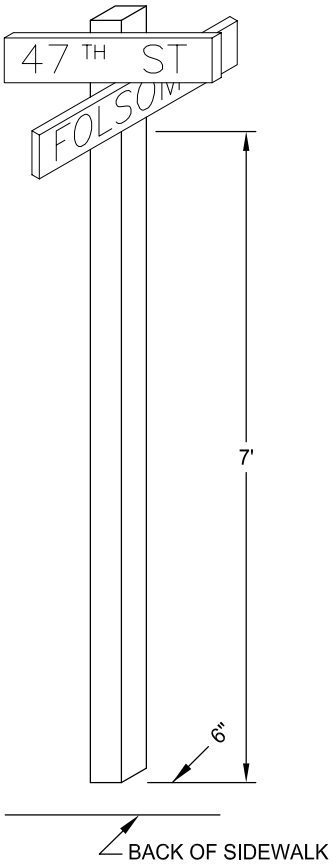

MATERIALS

1-4"X4"X10' POST S4S TREATED DOUGLAS FIR CONFORMING TO SEC. 56-2.02 OF CALTRANS STANDARD SPECIFICATIONS. 2-1/2"X6"X24" MIN. A/C EXT. PLYWOOD SIGNBOARD. WHITE PAINT TO CONFORM TO SEC. 91-3.02 OF CALTRANS STANDARD SPECIFICATIONS. ALL HARDWARE GALVANIZED.

DESIGN

THE SIGN SHALL HAVE BLACK GOTHIC LETTERS SIMILAR TO THOSE SHOWN ON A WHITE BACKGROUND. MIN. TWO (2) COATS OF PAINT ON SIGN-BOARD (BOTH) AND ON POST. LETTERING SHALL BE FOUR INCHES IN HEIGHT WITH A STROKE WIDTH OF NO LESS THAN ONE-HALF (1/2) INCH NOR MORE THAN THREE-FOUTHS (3/4) INCH. NUMERAL SUFFIXES (ST, NO, RD, TH) SHALL BE TWO INCHES IN HEIGHT WITH A STROKE WIDTH OF NO LESS THAN ONE-FOURTH (1/4) INCH NOR MORE THAN THREE-EIGHTS (3/8) INCH.

INSTALLATION

SIGN-BOARD SHALL BE FASTENED TO POST BY 2-1/4"X4 1/2" BOLTS. THE BOTTOM OF THE SIGN SHALL BE NO LESS THAN SEVEN FEET ABOVE THE GROUND IN WHICH THE POST IS SET.

LOCATION

THE LOCATION AND ORIENTATION IS TO BE DESIGNATED BY THE ENGINEER.

REV.	DATE	DESCRIPTION

R:\Utilstds\City_Std_Details\DOT_Civil_Details\T-360

CITY OF SACRAMENTO
DEPARTMENT OF TRANSPORTATION

TEMPORARY STREET SIGN

APPR'D BY: Nicholas Thomas NO SCALE
DATE: MAY 2007 DWG. NO. T - 360