APPENDIX E

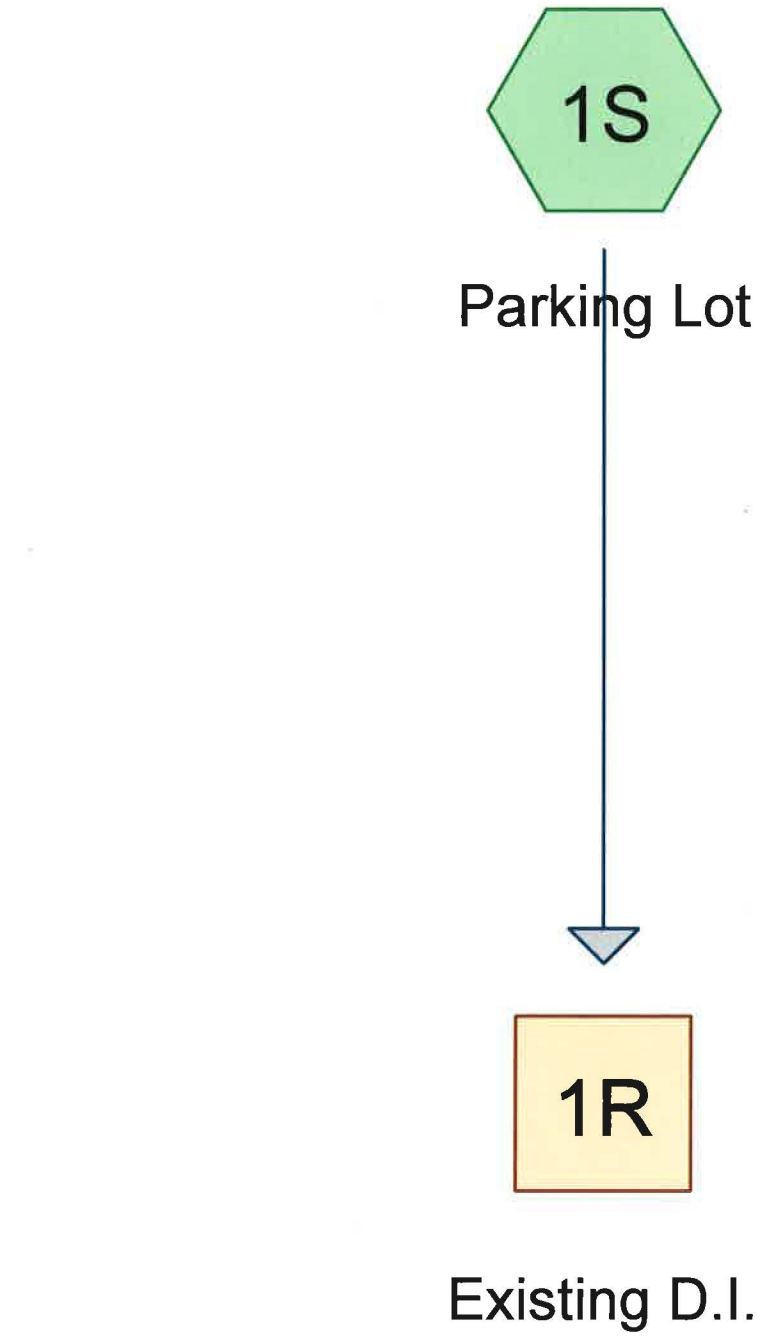

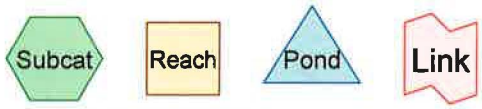

Drainage Diagram for 28th St_Solar Project_Carport Structure
Prepared by SCS Engineers, Printed 6/20/2012
HydroCAD® 9.10 s/n 03976 © 2010 HydroCAD Software Solutions LLC

Area Listing (all nodes)

Area (acres)	CN	Description (subcatchment-numbers)
1.080	98	Paved parking, HSG A (1S)
1.080		**TOTAL AREA**

Soil Listing (all nodes)

Area (acres)	Soil Group	Subcatchment Numbers
1.080	HSG A	1S
0.000	HSG B	
0.000	HSG C	
0.000	HSG D	
0.000	Other	
1.080		**TOTAL AREA**

Time span=9.00-40.00 hrs, dt=0.10 hrs, 311 points
Runoff by SCS TR-20 method, UH=SCS
Reach routing by Stor-Ind+Trans method - Pond routing by Stor-Ind method

Subcatchment 1S: Parking Lot Runoff Area=47,031 sf 100.00% Impervious Runoff Depth>2.26"
Flow Length=175' Slope=0.0001 '/' Tc=11.6 min CN=98 Runoff=3.28 cfs 0.203 af

Reach 1R: Existing D.I. Avg. Flow Depth=0.00' Max Vel=129.34 fps Inflow=3.28 cfs 0.203 af
n=0.013 L=307.0' S=0.0065 '/' Capacity=6,083,287.46 cfs Outflow=3.24 cfs 0.203 af

Total Runoff Area = 1.080 ac Runoff Volume = 0.203 af Average Runoff Depth = 2.26"
0.00% Pervious = 0.000 ac 100.00% Impervious = 1.080 ac

Summary for Subcatchment 1S: Parking Lot

[49] Hint: Tc<2dt may require smaller dt

Runoff = 3.28 cfs @ 11.98 hrs, Volume= 0.203 af, Depth> 2.26"

Runoff by SCS TR-20 method, UH=SCS, Time Span= 9.00-40.00 hrs, dt= 0.10 hrs
Type II 24-hr 2-Year Rainfall=2.70"

Area (sf)	CN	Description
47,031	98	Paved parking, HSG A
47,031		100.00% Impervious Area

Tc (min)	Length (feet)	Slope (ft/ft)	Velocity (ft/sec)	Capacity (cfs)	Description
11.6	175	0.0001	0.25		**Sheet Flow,** Smooth surfaces n= 0.011 P2= 5.90"

Subcatchment 1S: Parking Lot

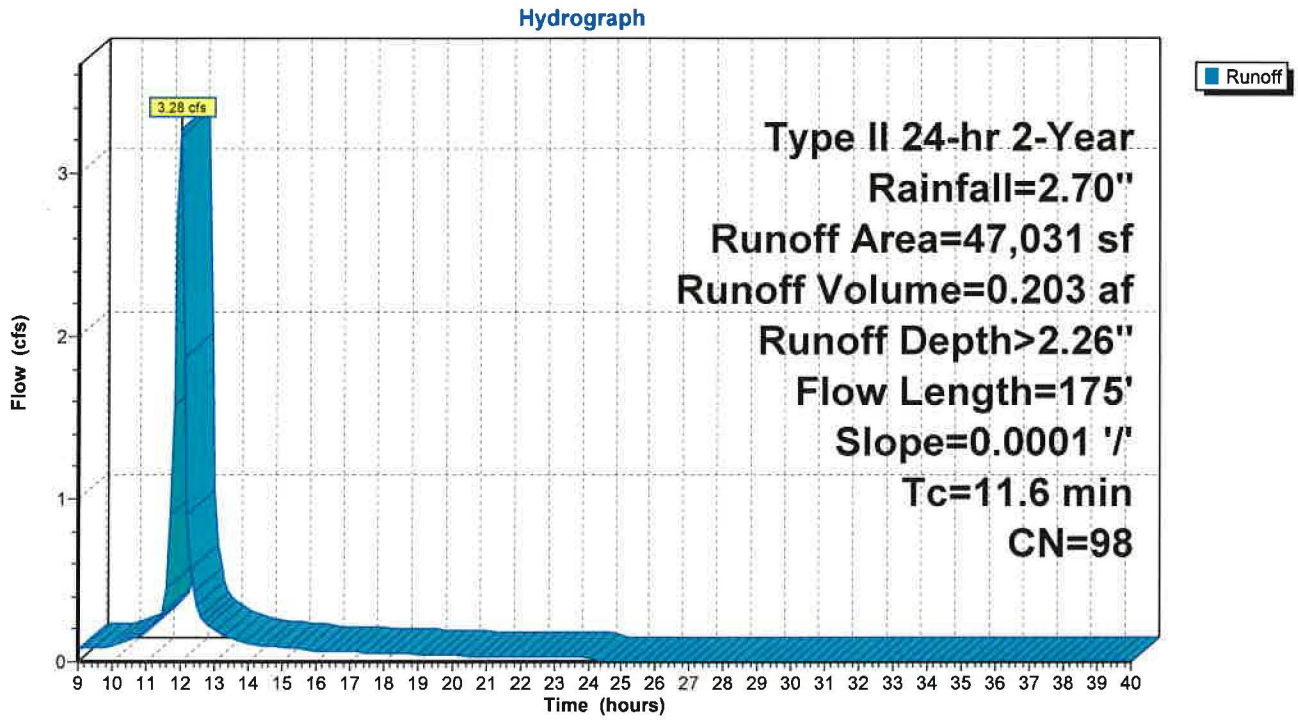

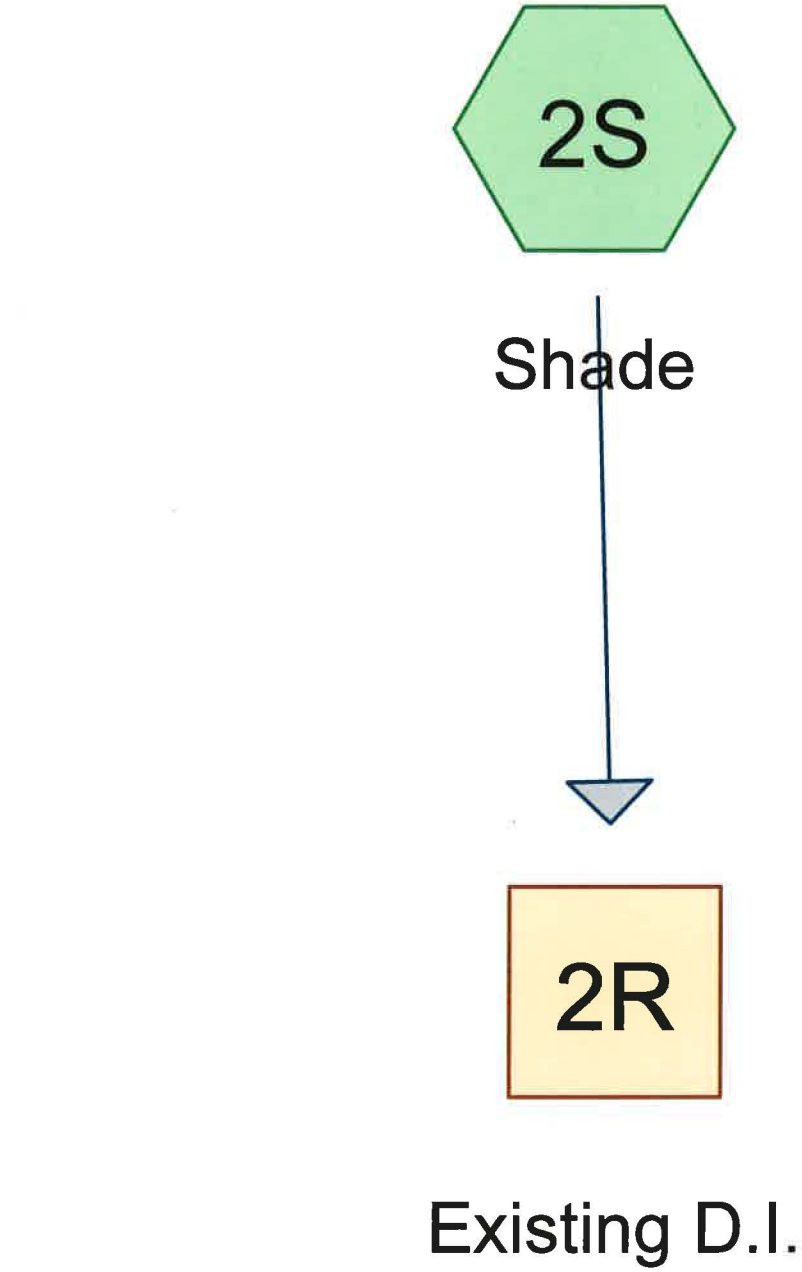

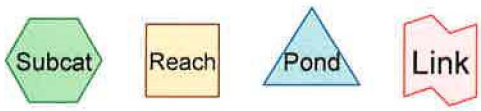

Drainage Diagram for 28th St_Solar Project Shade
Prepared by SCS Engineers, Printed 6/20/2012
HydroCAD® 9.10 s/n 03976 © 2010 HydroCAD Software Solutions LLC

Area Listing (all nodes)

Area (acres)	CN	Description (subcatchment-numbers)
1.530	81	Urban industrial, 72% imp, HSG A (2S)
1.530		**TOTAL AREA**

Soil Listing (all nodes)

Area (acres)	Soil Group	Subcatchment Numbers
1.530	HSG A	2S
0.000	HSG B	
0.000	HSG C	
0.000	HSG D	
0.000	Other	
1.530		**TOTAL AREA**

Time span=9.00-40.00 hrs, dt=0.10 hrs, 311 points
Runoff by SCS TR-20 method, UH=SCS
Reach routing by Stor-Ind+Trans method - Pond routing by Stor-Ind method

Subcatchment2S: Shade Runoff Area=66,653 sf 72.00% Impervious Runoff Depth>2.12"
Flow Length=250' Slope=0.0001 '/' Tc=15.5 min CN=81 Runoff=2.06 cfs 0.270 af

Reach 2R: Existing D.I. Avg. Flow Depth=0.00' Max Vel=8.22 fps Inflow=2.06 cfs 0.270 af
n=0.150 L=590.0' S=0.0034 '/' Capacity=547,858.63 cfs Outflow=1.95 cfs 0.269 af

Total Runoff Area = 1.530 ac Runoff Volume = 0.270 af Average Runoff Depth = 2.12"
28.00% Pervious = 0.428 ac 72.00% Impervious = 1.102 ac

Summary for Subcatchment 2S: Shade

[73] Warning: Peak may fall outside time span

Runoff = 2.06 cfs @ 10.03 hrs, Volume= 0.270 af, Depth> 2.12"

Runoff by SCS TR-20 method, UH=SCS, Time Span= 9.00-40.00 hrs, dt= 0.10 hrs
Type I 24-hr 100-Year Rainfall=4.10"

Area (sf)	CN	Description
66,653	81	Urban industrial, 72% imp, HSG A
18,663		28.00% Pervious Area
47,990		72.00% Impervious Area

Tc (min)	Length (feet)	Slope (ft/ft)	Velocity (ft/sec)	Capacity (cfs)	Description
15.5	250	0.0001	0.27		**Sheet Flow,** Smooth surfaces n= 0.011 P2= 5.90"

Subcatchment 2S: Shade

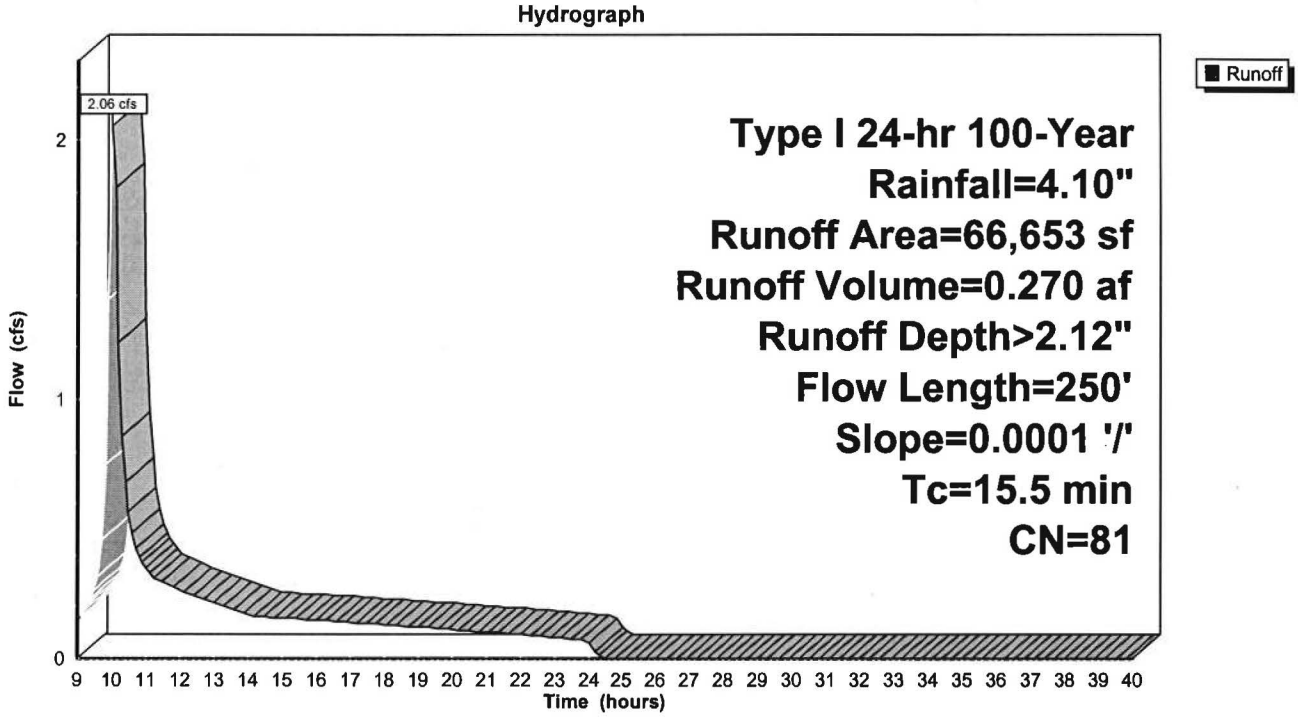

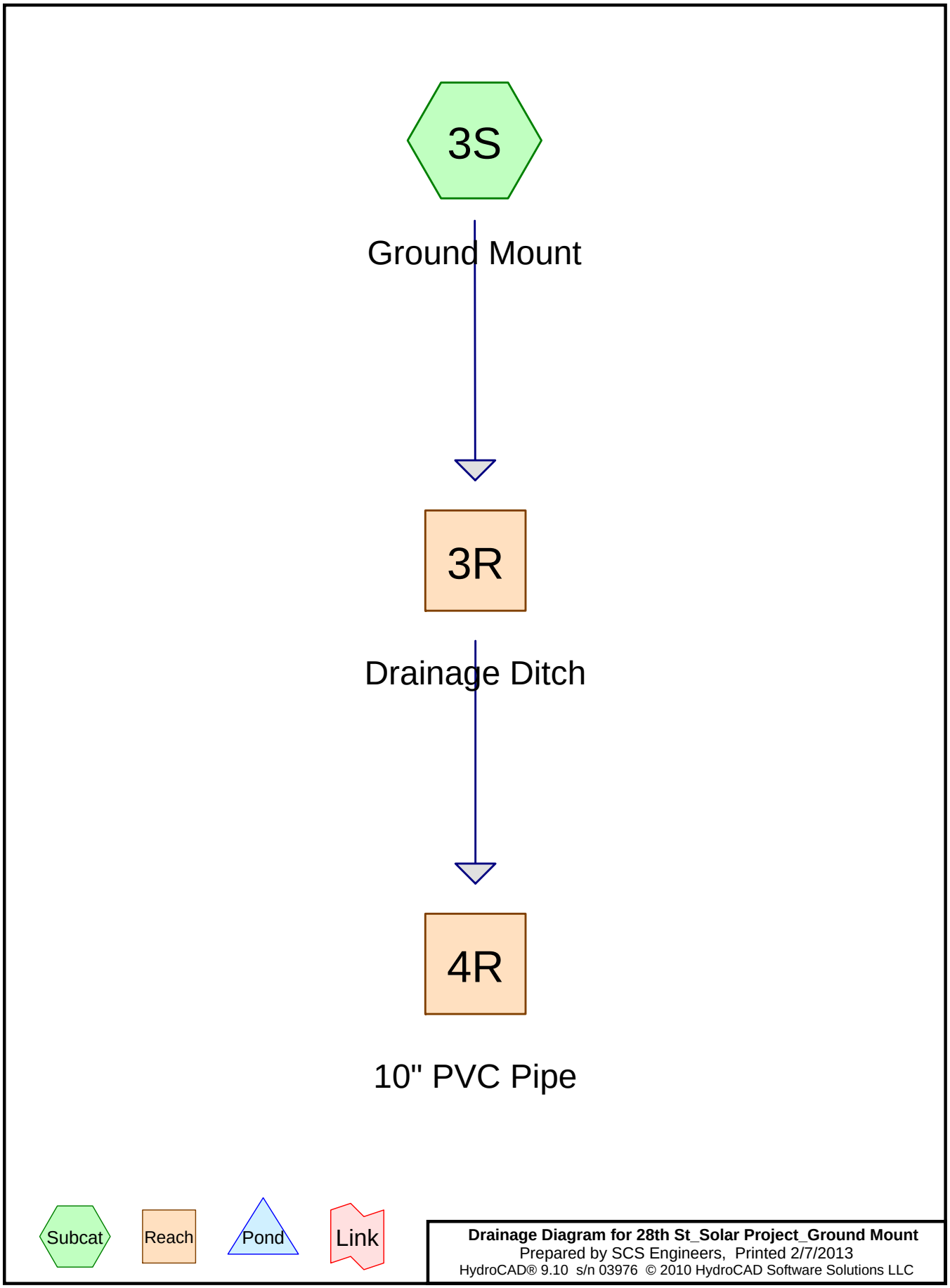
3S
Ground Mount
3R
Drainage Ditch
4R
10" PVC Pipe
Subcat
Reach
Pond
Link
Drainage Diagram for 28th St_Solar Project_Ground Mount
Prepared by SCS Engineers, Printed 2/7/2013
HydroCAD® 9.10 s/n 03976 © 2010 HydroCAD Software Solutions LLC

Area Listing (all nodes)

Area (acres)	CN	Description (subcatchment-numbers)
3.617	81	Urban industrial, 72% imp, HSG A (3S)
3.617		**TOTAL AREA**

Soil Listing (all nodes)

Area (acres)	Soil Group	Subcatchment Numbers
3.617	HSG A	3S
0.000	HSG B	
0.000	HSG C	
0.000	HSG D	
0.000	Other	
3.617		**TOTAL AREA**

Pipe Listing (all nodes)

Line#	Node Number	In-Invert (feet)	Out-Invert (feet)	Length (feet)	Slope (ft/ft)	n	Diam/Width (inches)	Height (inches)	Fill (inches)
1	4R	42.50	41.00	89.0	0.0169	0.011	10.0	0.0	0.0

Time span=9.00-40.00 hrs, dt=0.10 hrs, 311 points
Runoff by SCS TR-20 method, UH=SCS
Reach routing by Stor-Ind+Trans method - Pond routing by Stor-Ind method

Subcatchment 3S: Ground Mount Runoff Area=157,547 sf 72.00% Impervious Runoff Depth>2.12"
Flow Length=300' Slope=0.0001 '/' Tc=17.9 min CN=81 Runoff=4.52 cfs 0.639 af

Reach 3R: Drainage Ditch Avg. Flow Depth=1.91' Max Vel=0.69 fps Inflow=4.52 cfs 0.639 af
n=0.150 L=1,203.0' S=0.0083 '/' Capacity=2.87 cfs Outflow=2.51 cfs 0.638 af

Reach 4R: 10" PVC Pipe Avg. Flow Depth=0.54' Max Vel=6.76 fps Inflow=2.51 cfs 0.638 af
10.0" Round Pipe n=0.011 L=89.0' S=0.0169 '/' Capacity=3.36 cfs Outflow=2.51 cfs 0.638 af

Total Runoff Area = 3.617 ac Runoff Volume = 0.639 af Average Runoff Depth = 2.12"
28.00% Pervious = 1.013 ac 72.00% Impervious = 2.604 ac

Summary for Subcatchment 3S: Ground Mount

[73] Warning: Peak may fall outside time span

Runoff = 4.52 cfs @ 10.06 hrs, Volume= 0.639 af, Depth> 2.12"

Runoff by SCS TR-20 method, UH=SCS, Time Span= 9.00-40.00 hrs, dt= 0.10 hrs
Type I 24-hr 100-Year Rainfall=4.10"

Area (sf)	CN	Description
157,547	81	Urban industrial, 72% imp, HSG A
44,113		28.00% Pervious Area
113,434		72.00% Impervious Area

Tc (min)	Length (feet)	Slope (ft/ft)	Velocity (ft/sec)	Capacity (cfs)	Description
17.9	300	0.0001	0.28		**Sheet Flow,** Smooth surfaces n= 0.011 P2= 5.90"

Subcatchment 3S: Ground Mount

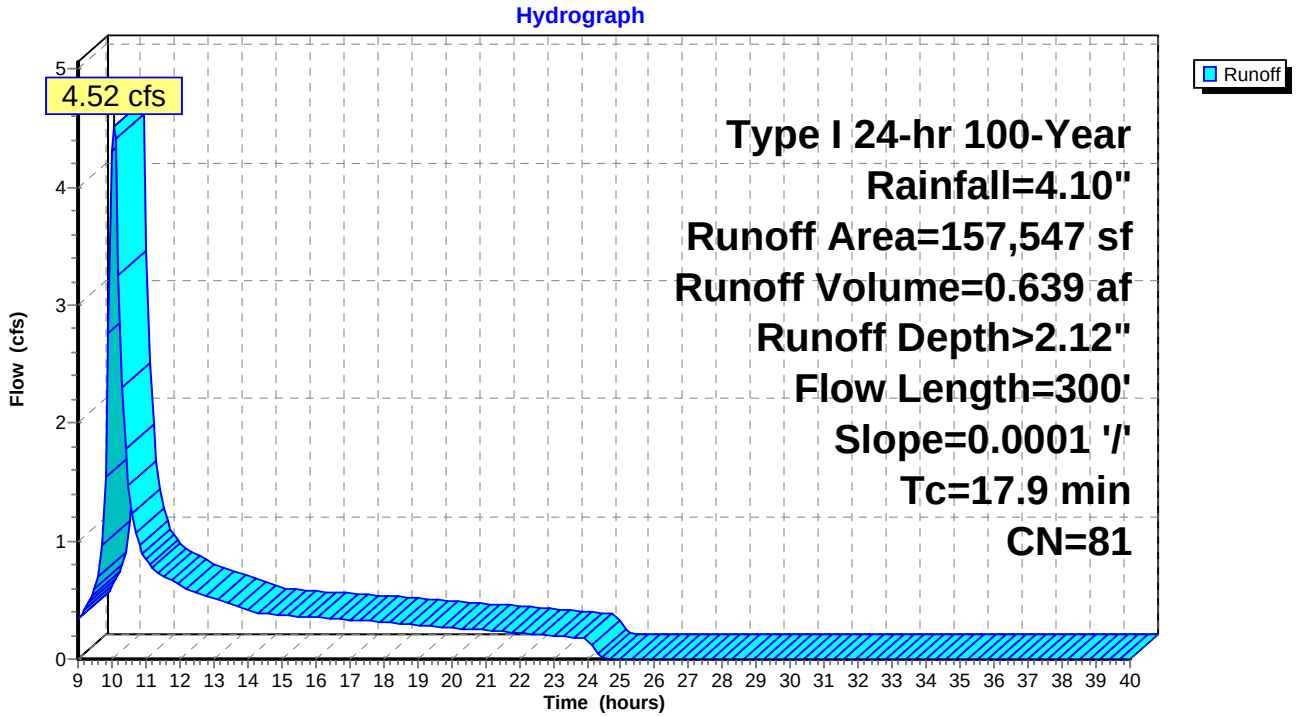

Summary for Reach 3R: Drainage Ditch

[82] Warning: Early inflow requires earlier time span
[55] Hint: Peak inflow is 158% of Manning's capacity

Inflow Area = 3.617 ac, 72.00% Impervious, Inflow Depth > 2.12" for 100-Year event
Inflow = 4.52 cfs @ 10.06 hrs, Volume= 0.639 af
Outflow = 2.51 cfs @ 10.78 hrs, Volume= 0.638 af, Atten= 44%, Lag= 43.0 min

Routing by Stor-Ind+Trans method, Time Span= 9.00-40.00 hrs, dt= 0.10 hrs
Max. Velocity= 0.69 fps, Min. Travel Time= 28.9 min
Avg. Velocity = 0.28 fps, Avg. Travel Time= 72.4 min

Peak Storage= 4,379 cf @ 10.29 hrs
Average Depth at Peak Storage= 1.91'
Bank-Full Depth= 2.00', Capacity at Bank-Full= 2.87 cfs

0.00' x 2.00' deep channel, n= 0.150 Sheet flow over Short Grass
Side Slope Z-value= 1.0 '/' Top Width= 4.00'
Length= 1,203.0' Slope= 0.0083 '/'
Inlet Invert= 54.00', Outlet Invert= 44.00'

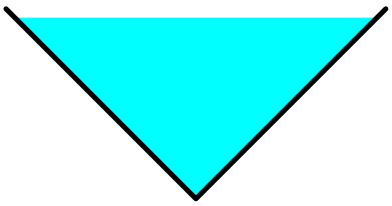

Reach 3R: Drainage Ditch

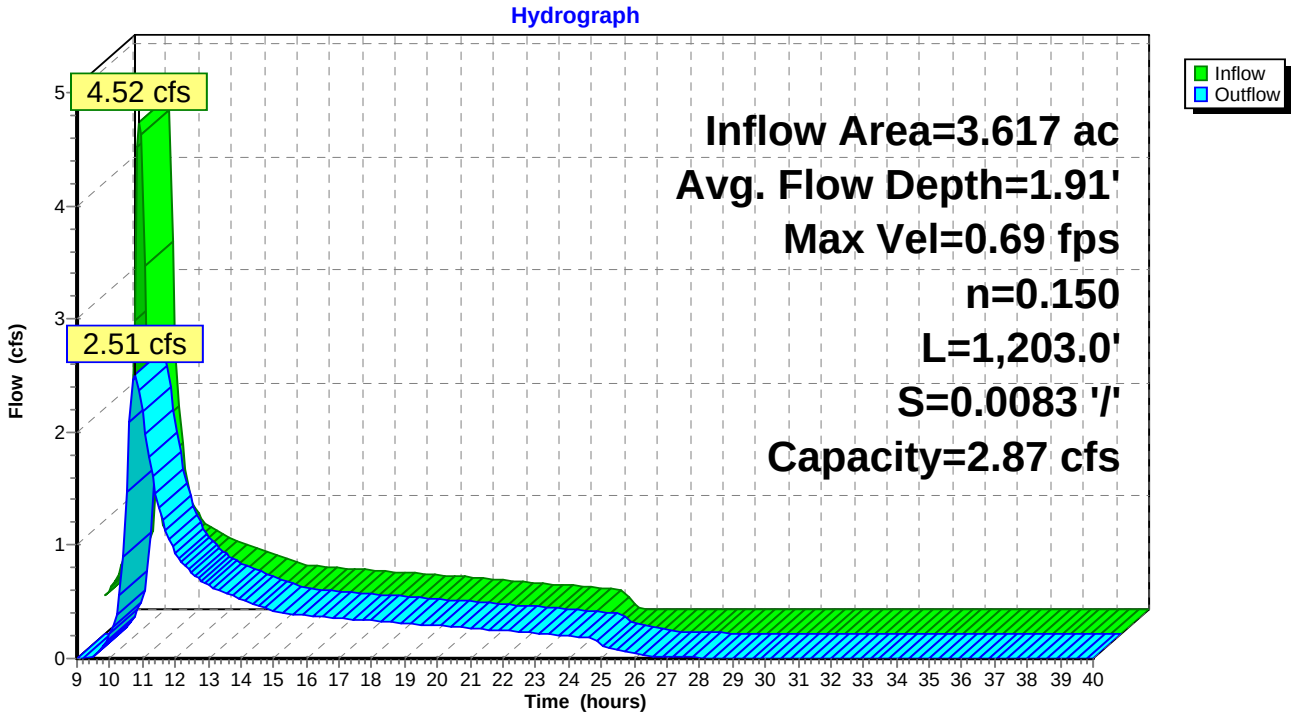

Summary for Reach 4R: 10" PVC Pipe

[52] Hint: Inlet/Outlet conditions not evaluated

Inflow Area = 3.617 ac, 72.00% Impervious, Inflow Depth = 2.12" for 100-Year event
Inflow = 2.51 cfs @ 10.78 hrs, Volume= 0.638 af
Outflow = 2.51 cfs @ 10.78 hrs, Volume= 0.638 af, Atten= 0%, Lag= 0.6 min

Routing by Stor-Ind+Trans method, Time Span= 9.00-40.00 hrs, dt= 0.10 hrs
Max. Velocity= 6.76 fps, Min. Travel Time= 0.2 min
Avg. Velocity = 2.56 fps, Avg. Travel Time= 0.6 min

Peak Storage= 33 cf @ 10.78 hrs
Average Depth at Peak Storage= 0.54'
Bank-Full Depth= 0.83', Capacity at Bank-Full= 3.36 cfs

10.0" Round Pipe
n= 0.011 PVC, smooth interior
Length= 89.0' Slope= 0.0169 '/'
Inlet Invert= 42.50', Outlet Invert= 41.00'

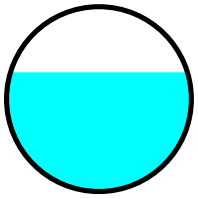

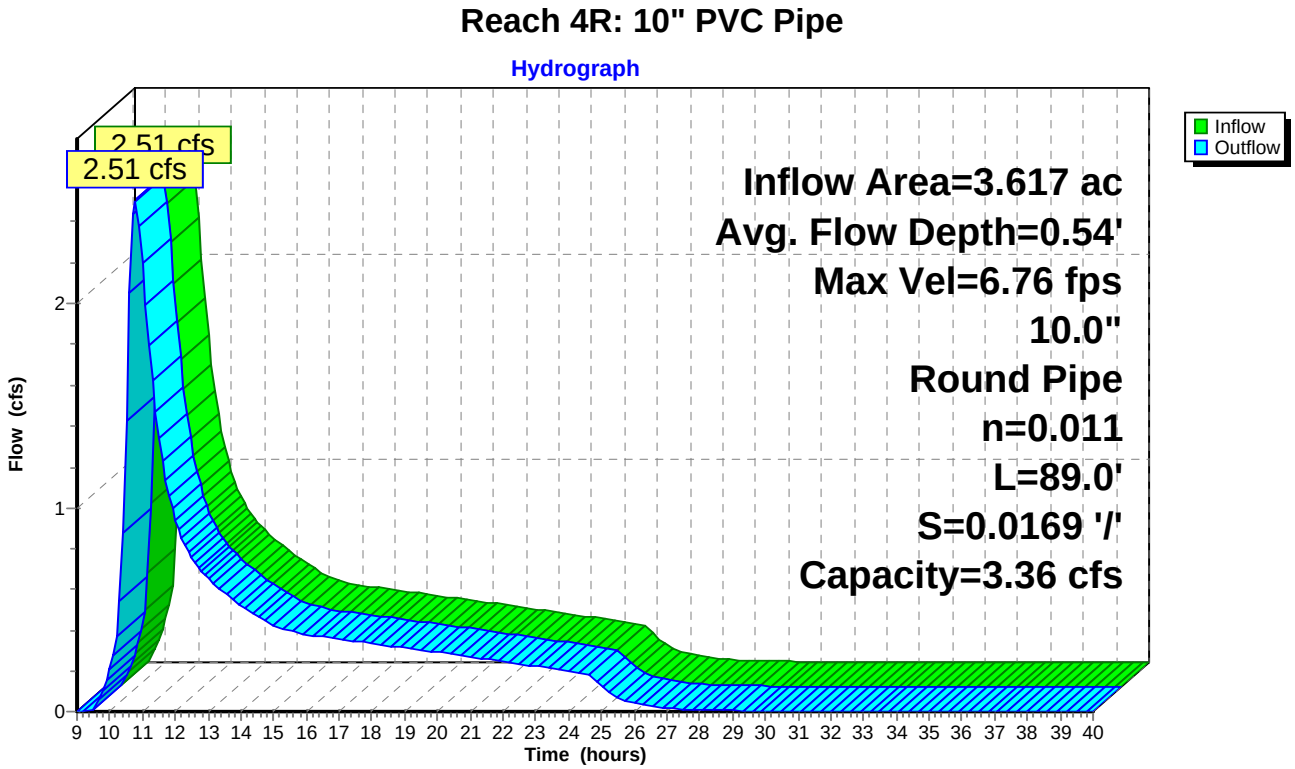

APPENDIX F

ALTERNATE GROUND MOUNTING SYSTEM

Alternate Array 3 Mounting System

Array 3 is proposed to be located on parcel APN 003-0010-001 in a portion of the compost/parking area of West Site as shown on Figure 5. The cover system in this area consists of 2 to 4 inches of asphalt over 6 to 18 inches of aggregate base. Under the aggregate base are 3 to 18 feet of soil cover and 12 to 32.5 feet of landfill debris. Beneath the landfill debris are native sand and gravel layers typically encountered from 32 to 43.5 feet below ground surface.

The alternate solar array mounting system consists of helical earth screws that are installed through the asphalt layer and into the soil cover beneath. The earth screws are designed to support the solar panel support system using earth pressure for support. The supports will penetrate the landfill cover in Area 3, but will be capped to prevent water from entering the top of the earth screw component. The subsurface portion on the helical earth screws is galvanized in accordance with ISO 1461.

Settlement is estimated to be approximately 2 inches, which is less than the concrete ballast support system. Repairs will be made as described in the Postclosure Maintenance Plan. The estimated postclosure costs are the same for the helical earth screw system as the concrete ballast system.

GEOTECHNICAL REPORT

GEOTECHNICAL ENGINEERING INVESTIGATION REPORT SOLAR PV SYSTEM AT SACRAMENTO LANDFILL KERN COUNTY, CALIFORNIA

BSK G13-038-10B

Prepared for:

CONERGY PROJECTS, INC.
3947 Lennane Drive, Suite 275
Sacramento, CA 95834

April 1, 2013

© BSK ASSOCIATES All rights reserved. Reproduction of any part of this document without the written permission of BSK is prohibited.

BSK Associates
Engineers & Laboratories

700 22nd Street
Bakersfield CA 93301
P 661.327.0671
F 661.324.4218
www.bskassociates.com

VIA US MAIL & E-MAIL

April 1, 2013 **BSK G13-038-10B**

Mr. Trevor Van Cleave
Conergy Projects Inc.
3947 Lennane Drive, Suite 275
Sacramento, CA 95834

SUBJECT: Geotechnical Engineering Investigation
Solar PV System at Sacramento Landfill
Sacramento, California

Dear Mr. Van Cleave:

BSK Associates (BSK) has completed the geotechnical investigation for the proposed Solar PV System at Sacramento Landfill in Sacramento, California. The geotechnical investigation, which included a field exploration, laboratory testing program, engineering analysis, and preparation of this report, was conducted in accordance with our proposal BSK Proposal GB12-7045, dated February 27, 2013. The enclosed report provides geotechnical recommendations for use in preparation of plans and specifications for the subject project.

We appreciate the opportunity to assist you during the design phase of your project and look forward to continuing our relationship on this project through construction. If you have any questions, please contact us.

Respectfully submitted,
BSK ASSOCIATES

On Man Lau

REGISTERED PROFESSIONAL ENGINEER
ON MAN LAU
No. 2644
Exp. 12/31/13
GEOTECHNICAL
STATE OF CALIFORNIA

On Man Lau P.E., G.E.
Bakersfield Branch Manager

Distribution: Client (3 Originals, Email: [T.Vancleave@conergy.us])
BSK File (1 original + E-Copy)

© **BSK ASSOCIATES** All rights reserved. Reproduction of any part of this document without the written permission of BSK is prohibited.

TABLE OF CONTENTS

Page

1.0 INTRODUCTION 1
1.1 Planned Construction 1
1.2 Purpose And Scope Of Services 1
2.0 FIELD INVESTIGATION AND LABORATORY TESTING 1
2.1 Field Exploration 1
2.2 Laboratory Testing 2
3.0 SITE AND GEOLOGY/SEISMIC CONDITIONS 2
3.1 Site Description and Surface Conditions 2
3.2 GEOLOGIC SETTING 2
3.3 GEOLOGIC/SEISMIC HAZARDS 2
3.3.1 Fault Rupture Hazard Zones in California 2
3.3.2 State of California Seismic Hazard Zones (Liquefaction and Landslides) 3
3.3.3 Slope Stability and Potential for Slope Failure 3
3.4 Subsurface Conditions 3
3.5 Groundwater Conditions 3
4.0 CONCLUSIONS AND RECOMMENDATIONS 3
4.1 Seismic Design Criteria 4
4.2 Soil Corrosivity 4
4.3 Site Preparation and Earthwork Construction 5
4.4 Foundations 6
4.4.1 Spread Footing and Grade Beams 6
4.4.2 Pole Type Foundations 6
4.5 Lateral Earth Pressures and Frictional Resistance 7
4.6 Pipe Bedding and Envelope 7
4.7 Trench Backfill and Compaction 8
4.8 Surface Drainage Control 8
5.0 PLANS AND SPECIFICATIONS REVIEW 8
6.0 CONSTRUCTION TESTING AND OBSERVATIONS 9
7.0 LIMITATIONS 9

TABLE OF CONTENTS (Continued)

TABLES

Table 1: Seismic Design Parameters
Table 2: Recommended Static Lateral Earth Pressures

APPENDICES

Appendix A: Field Exploration
- Figure A-1: Site Vicinity Map
- Figure A-2: Boring Location Map
- Table A-1: Consistency of Coarse-Grained Soil by Sampler Blow Count
- Table A-2: Consistency of Fine-Grained Soil by Sampler Blow Count
- Figure A-3: Boring Log Legend
- Boring Logs: Borings B-1 through B-7

Appendix B: Laboratory Testing
- Table B-1: Summary of Corrosion Test Results
- Figures B-1 and B-2: Direct Shear Tests
- Figure B-3 through B-7: Consolidation Tests
- Figure B-8 Expansion Index

Appendix C:
- Reference Report Boring Logs (Dated February 23, 2005).
- Reference: Sutter's Landing Park Feasibility Study prepared by Landscape Architect, Inc. dated February 23, 2005.

BSK

GEOTECHNICAL ENGINEERING INVESTIGATION REPORT
SOLAR PV SYSTEM AT SACRAMENTO LANDFILL
SACRAMENTO, CALIFORNIA

1.0 INTRODUCTION

This report presents the results of a Geotechnical Engineering Investigation conducted by BSK Associates (BSK) for the proposed Solar PV (Photovoltaic) System to be located at existing Sacramento Landfill (Site). The Site is located approximately 400 feet east of northeast corner of the intersection of 28th Street and B Street in Sacramento, California, as shown on the Site Vicinity Map, Figure A-1. The geotechnical engineering investigation was conducted in accordance with BSK Proposal GB12-7045, dated February 27, 2013.

In preparation on this report, the reference report: Sutter's Landing Park Feasibility Study prepared by Landscape Architect, Inc. dated February 23, 2005 was reviewed.

This report provides a description of the geotechnical conditions at the site and provides specific recommendations for earthwork and foundation design with respect to the planned facility. In the event that changes occur in the design of the project, this report's conclusions and recommendations will not be considered valid unless the changes are reviewed with BSK and the conclusions and recommendations are modified or verified in writing. Examples of such changes would include location, size of structures, foundation loads, etc.

1.1 PLANNED CONSTRUCTION

The proposed project consists of a combination of carport, shade structures and ground mount PV arrays located at an existing parking lot, existing dog park, and the southern face of an existing landfill. The carport mounted system and shade structures will be supported on shallow foundations. The ground mount PV array will be mounted on ballasts or helical screw piles.

In the event that significant changes occur in the design of the proposed improvements, this report's conclusions and recommendations will not be considered valid unless the changes are reviewed with BSK and the conclusions and recommendations are modified or verified in writing.

1.2 PURPOSE AND SCOPE OF SERVICES

The objective of this geotechnical investigation was to characterize the subsurface conditions in the areas of the proposed structure areas, and provide geotechnical engineering recommendations for the preparation of plans and specifications. The scope of the investigation included a field exploration, laboratory testing, engineering analyses, and preparation of this report.

2.0 FIELD INVESTIGATION AND LABORATORY TESTING

2.1 FIELD EXPLORATION

The field exploration for this investigation was conducted under the oversight of a BSK staff member. Seven (7) borings were drilled at the site on March 11, 2013 using either a truck-mounted

hollow stem auger drill rig. The borings were drilled to depths ranging from 11.5 to 16.5 feet beneath the existing ground surface (bgs). The locations of the borings are indicated on the Boring Location Map, Figure A-2. Details of the field exploration and the boring logs are provided in Appendix A. The boring logs from the reference report dated 2005 are presented in Appendix C.

2.2 LABORATORY TESTING

Laboratory tests were performed on selected soil samples to evaluate moisture content, dry density, shear strength, consolidation properties, expansion index, and corrosion characteristics. A description of the laboratory test methods and results are presented in Appendix B.

3.0 SITE AND GEOLOGY/SEISMIC CONDITIONS

The following sections address the site description and surface conditions, regional geology and seismic hazards, subsurface conditions, and groundwater conditions at the Site. This information is based on BSK's field exploration and published maps and reports.

3.1 SITE DESCRIPTION AND SURFACE CONDITIONS

The township and range data for the site were not available to us at the time of our investigation. We reference the parcel by Sacramento County APN (Assessor's Parcel Number) # 003-0010-001-0000. The NAD 83 GPS coordinates for the site location are 38.5850 degrees North latitude and -121.4657 degrees West longitude. The Site is bounded on the east by Sutter's Landing Regional Park, on the north by the American River, on the west by vacant field, on the south by constructed residential buildings. The American River on the north is flowing to the south.

3.2 GEOLOGIC SETTING

The site area is located in the Great Valley geomorphic province near the confluence of the America River with the Sacramento Delta. The site is located in the great valley which forms a broad syncline with deposits of marine and overlying continental sediments, Jurassic to Holocene in age. The thickness of the sediments increases to the west and reach a thickness of as much as 20,000 feet on the west side of the San Joaquin Valley syncline. East of the site area are the Sierra Nevada Mountains consisting of Mesozoic folded metamorphic rocks and Mesozoic plutonic rocks.

The site area is situated on recent to Holocene age alluvium, consisting of gravel, sand, and silts deposited by the meandering American River. At depth the site is probably underlain by Pleistocene age Riverbank formation.

3.3 GEOLOGIC/SEISMIC HAZARDS

The types of geologic and seismic hazards assessed include surface ground fault rupture, liquefaction, seismically-induced settlement, slope failure, flood hazards and inundation hazards.

3.3.1 Fault Rupture Hazard Zones in California

The purpose of the Alquist-Priolo Geologic Hazards Zones Act, as summarized in CDMG Special Publication 42 (SP 42), is to "prohibit the location of most structures for human occupancy across the traces of active faults and to mitigate thereby the hazard of fault-rupture." As indicated by SP 42,

"the State Geologist is required to delineate "earthquake fault zones" (EFZs) along known active faults in California. Cities and counties affected by the zones must regulate certain development 'projects' within the zones. They must withhold development permits for sites within the zones until geologic investigations demonstrate that the sites are not threatened by surface displacement from future faulting.

The Site is not located in a Fault-Rupture Hazard Zone. The closest Fault-Rupture Hazard Zone is associated with the Green Valley Fault, approximately 40 miles west of the Site.

3.3.2 State of California Seismic Hazard Zones (Liquefaction and Landslides)

The Site is not currently located in a Seismic Hazard Zone specified by State of California.

3.3.3 Slope Stability and Potential for Slope Failure

The site and the majority of the surrounding areas are essentially flat and the potential hazard due to landslides from adjacent properties is not applicable. The adjacent landfill slopes consist of an engineered system designed to resist slope failure (Reference Report dated 2005).

3.4 SUBSURFACE CONDITIONS

Based on the current and reference investigations, subsurface soil consist of 3 to 18 feet of soil cover. The soil cover consists of a variety of materials, including: sandy silt with gravel, sandy clay, clayey sand, and silty sand. Varying amounts of concrete rubble were encountered within the soil cover. Below the soil cover, landfill debris is between 12 to 33 feet thick. The landfill debris consists primarily of soil, wood, paper, and glass. Minor landfill constituents include decomposed material, concrete, brick, plastic, fabric, and metal.

Based on the results of the consolidation test, the on-site soils the upper 15 feet are considered to have a low potential for hydrocompaction.

The upper 5 feet of on-site soils are considered to have a very low expansion potential with an expansion index of one (1).

The boring logs in Appendix A provide a more detailed description of the materials encountered, including the applicable Unified Soil Classification System symbols.

3.5 GROUNDWATER CONDITIONS

Groundwater was not encountered in the test borings drilled to a maximum depth of 16.5 feet at the Site on March 11, 2013. Based on the Reference Report 2005, groundwater depth in the vicinity is approximately 40 feet below existing grade. The possibility of the groundwater table rising to shallower depths and/or the presence of perched groundwater may occur due to irrigation, seasonal effects, or other factors not evident at the time of the investigation.

4.0 CONCLUSIONS AND RECOMMENDATIONS

Based upon the data collected during this investigation, and from a geotechnical engineering standpoint, it is our opinion that the soil conditions would not preclude the construction of the

proposed improvements. The near surface soils across the Site consist soil cover over land fill debris.

The proposed carport and shade structures must be supported on shallow foundations and, ground mount PV System can be supported on ballasts or helical screw pile if the recommendations presented herein are incorporated into the design and construction of the project.

If helical screw pile is used, difficult drilling may encountered due to the concrete debris.

4.1 SEISMIC DESIGN CRITERIA

Based on sampler blow counts and the correlated Standard Penetration Test (SPT) "N" values from our soil borings and in accordance with Table 1613.5.2 of the 2010 California Building Code (CBC), the site can be classified as Site Class D ($15 \leq N \leq 50$).

Use of the 2010 California Building Code (CBC) seismic design criteria is considered appropriate and the following parameters should be considered applicable for the structural design of structural improvements:

Table 1: Seismic Design Parameters

Seismic Design Parameter	Value		Reference
MCE Mapped Spectral Acceleration (g)	$S_S = 0.567$	$S_1 = 0.238$	USGS Mapped Value
Amplification Factors (Site Class D)	$F_a = 1.346$	$F_v = 1.924$	Table 1613.5.3
Site Adjusted MCE Spectral Acceleration (g)	$S_{MS} = 0.763$	$S_{M1} = 0.458$	Equations 16-36 and 37
Design Spectral Acceleration (g)	$S_{DS} = 0.509$	$S_{D1} = 0.305$	Equations 16-38, and 39
Design Peak Ground Acceleration (S_{DS} /2.5) (g)	PGA = 0.20		CBC 1803.5.12 (2)

As shown above, the short period design spectral response acceleration coefficient, SDS, is greater than 0.5, therefore the site lies in Seismic Design Category D as specified in Section 1613.5.6 of the 2010 CBC. The long period design spectral response acceleration coefficient, SD1, is greater than 0.2, therefore the site lies in Seismic Design Category D as specified in Section 1613.5.6 of the 2010 CBC. In accordance with the 2010 CBC, each structure shall be assigned to the more severe seismic design category in accordance with Table 1613.5.6(1) or 1613.5.6(2), irrespective of the fundamental period of vibration of the structure.

4.2 SOIL CORROSIVITY

A near surface soil sample obtained from the Site was tested to provide a preliminary screening of the potential for concrete deterioration or steel corrosion due to attack by soil-borne soluble salts. The test results are presented in Table B-1: Summary of Corrosion Test Results in Appendix B.

Based on the limited testing performed, the use of a special concrete formulation is not indicated. Based on our experience in this area, generally, the soil has a low resistivity which is considered corrosive to buried metal conduit. Therefore, buried steel pipes and ferrous metal objects should be provided with protective coatings.

4.3 SITE PREPARATION AND EARTHWORK CONSTRUCTION

The following procedures must be implemented during Site preparation for the proposed Site improvements. References to maximum dry density, optimum moisture content, and relative compaction are based on ASTM D 1557 (latest test revision) laboratory test procedures.

1. The areas of proposed improvements must be cleared of surface vegetation and debris. Materials resulting from the clearing and stripping operations must be removed and properly disposed. Removal of vegetation must be complete and include the associated root systems. The anticipated stripping depth is approximately 3 inches. Organic rich strippings must not be used in engineered fill but may be used in landscape areas. After the clearing and stripping operations have been completed, ***the exposed ground surface must be reviewed by the Geotechnical Engineer to evaluate if loose or soft zones are present that will require additional over excavation.*** Following review by the Geotechnical Engineer at the carport and shade structures, the bottom of shallow foundation areas must be scarified a depth of 8 inches moisture conditioned to within two percent (2%) of optimum moisture content, and compacted to at least 90 percent of the maximum dry density.

2. Import soil or native excavated soils, free of organic materials or deleterious substances, may be placed as compacted engineered fill. The material must be free of oversized fragments greater than 3 inches in greatest dimension. Engineered fill must be placed in uniform layers not exceeding 8 inches in loose thickness, moisture conditioned to within 2 percent of optimum moisture content, and compacted to at least 90 percent relative compaction.

3. Import fill materials must be free from organic materials or deleterious substances. The project specifications must require the contractor to contact BSK to review the proposed import fill materials for conformance with these recommendations at least one week prior to importing to the Site, whether from on-site or off-site borrow areas. Imported fill soils must be non-hazardous and derived from a single, consistent soil type source conforming to the following criteria:

Plasticity Index:	< 12
Expansion Index:	< 20 (Very Low Expansion Potential)
Maximum Particle Size:	3 inches
Percent Passing #4 Sieve:	65 - 100
Percent Passing #200 Sieve:	20 - 45
Minimum R-value (in paved areas)	25
Low Corrosion Potential:	Soluble Sulfates < 1,500 ppm
	Soluble Chlorides < 150 ppm
	Minimum Resistivity > 3,000 ohm-cm

4. If possible, earthwork operations should be scheduled during a dry, warm period of the year. Should these operations be performed during or shortly following periods of inclement weather, flooding, or overwatering, unstable soil conditions may result in the soils exhibiting a "pumping" condition. This condition is caused by excess moisture in combination with moving construction equipment, resulting in saturation and zero air voids in the soils. If this condition occurs, the adverse soils will need to be over-excavated to the depth at which stable soils are encountered, and replaced with suitable soils compacted as engineered fill. Alternatively, the Contractor may proceed with grading operations after utilizing a method to stabilize the soil subgrade, which should be subject to review and approval by BSK prior to implementation.

4.4 FOUNDATIONS

4.4.1 Spread Footing and Grade Beams

For the Carport and Dog Park Shade Structures, continuous and isolated spread footings must have a minimum width of 12 inches and 24 inches, respectively. Spread footing foundations may be designed using a net allowable bearing pressure of 2,000 pounds per square foot (psf). The net allowable bearing pressure applies to the dead load plus live load (DL + LL) condition; it may be increased by 1/3 for wind or seismic loads. Total foundation settlements are expected to be one inch and differential settlements between similarly loaded (DL + LL) and sized footings are anticipated to be ½ inch.

For the Ballast Foundation founded on the surface, the foundation may be designed using a net allowable bearing pressure of 1,500 pounds per square foot (psf). The net allowable bearing pressure applies to the dead load plus live load (DL + LL) condition; it may be increased by 1/3 for wind or seismic loads. Total foundation settlements are expected to be one inch and differential settlements between similarly loaded (DL + LL) and sized footings are anticipated to be ½ inch.

In addition, at the existing landfill, secondary settlement would be approximately 1 inch over a 30 year period (Reference Report dated 2005).

4.4.2 Pole Type Foundations

It is anticipated that the structures will be supported on pole-type foundations such as driven piles, drilled concrete piers, or helical screws. This type of foundation should be designed in accordance with Section 1807.3.2 of the 2010 CBC. However, it is recommended that an allowable lateral soil bearing pressure of 190 psf per foot of embedment be used to develop parameters S1 and S3 rather than one of the values given in Table 1806.2. This value includes a factor of safety of 2.

The allowable lateral bearing pressure includes a factor of 2 and may be doubled according to the CBC Section 1806.3.4 for pole type foundations not adversely affected by ½ inch of movement at the ground surface.

The lateral bearing pressure is permitted to be increased by 1/3 where used with the alternative basic load combinations of CBC Section 1605A.3.2 that include wind or earthquake loads.

The lateral bearing pressure shall be permitted to be increased for each additional foot of embedment up to a maximum of 8 times the allowable bearing pressure.

An allowable (downward vertical) skin friction of 250 psf (includes a factor of safety of 2) to support vertical loads applied to the pile foundations.

The total settlement of pole foundations designed in accordance with these recommendations should not exceed one-half inch.

An allowable skin friction of 250 psf may be used to resist transient uplift loads (includes a factor of safety of 2). The weight of the pile may be taken into consideration when determining resistance to uplift loads.

4.5 LATERAL EARTH PRESSURES AND FRICTIONAL RESISTANCE

Provided the Site is prepared as recommended above, the following earth pressure parameters for footings may be used for design purposes. The parameters shown in the table below are for drained conditions of select engineered fill or undisturbed native soil.

Table 2: Recommended Static Lateral Earth Pressures for Native Soil

Lateral Pressure Condition	Equivalent Fluid Density (pcf) Drained Condition
Active Pressure	40
At Rest Pressure	60
Passive Pressure	375

The lateral earth pressures listed herein are obtained by the conventional equation for active and passive conditions assuming level backfill and a bulk unit weight of 125 pcf for the loose to medium dense silty sand.

A coefficient of friction of 0.3 may be used between soil sub-grade and the bottom of footings. The coefficient of friction and passive earth pressure values given above represent ultimate soil strength values. BSK recommends that a safety factor consistent with the design conditions be included in their usage. For stability against lateral sliding that is resisted solely by the passive earth pressure against footings or friction along the bottom of footings, a minimum safety factor of 1.5 is recommended. For stability against lateral sliding that is resisted by combined passive pressure and frictional resistance, a minimum safety factor of 2.0 is recommended. For lateral stability against seismic loading conditions, a minimum safety factor of 1.2 is recommended.

4.6 PIPE BEDDING AND ENVELOPE

A minimum of 6 inches of bedding material is recommended for pipe installations. The bedding material and backfill within the pipe envelope (up to 12 inches above the pipe) should consist of sandy material with not more than 10 percent passing the #200 sieve, 100 percent passing the 3/8-inch sieve, and a sand equivalent of at least 30.

In the case of flexible pipe installation, a minimum of eight inches (8") of bedding material is recommended for pipe installation. Bedding material must consist of medium- or coarse-grained sand with a Sand Equivalent of at least 25. As an alternative to using sand, the pipe bedding and envelope material may consist of Class 2 Aggregate Base as specified in Section 26 of the Caltrans Standard Specifications or sand–cement slurry that contains 1.5 to 2.0 sacks of cement per yard of material and has a 4- to 6-inch slump.

Bedding and pipe envelope must be placed in loose thickness not exceeding 10-inches and compacted to at least 90 percent of the maximum dry density of ASTM D1557. Soil backfill moisture content during compaction must be maintained within two percent (2%) of optimum. Water jetting to attain compaction should not be allowed. Class 2 Aggregate Base, when used for bedding or pipe envelope must be compacted to at least 92 percent of ASTM D1557.

4.7 TRENCH BACKFILL AND COMPACTION

Processed on-site soils, which are free of organic material, are suitable for use as general trench backfill above the pipe envelope. Native soil with particles less than three inches in the greatest dimension may be incorporated into the backfill and compacted as specified above, provided they are properly mixed into a matrix of friable soils. The backfill must be placed in thin layers not exceeding 12 inches in loose thickness, be well-blended and consistent texture, moisture conditioned to at least optimum moisture content, and compacted to at least 90 percent of the maximum dry density as determined by the ASTM D1557. The uppermost 12 inches of trench backfill below pavement sections must be compacted to at least 95 percent of the maximum dry density as determined by ASTM D1557. Moisture content within two percent of optimum must be maintained while compacting this upper 12 inch trench backfill zone.

We recommend that trench backfill be tested for compliance with the recommended Relative Compaction and moisture conditions. Field density testing should conform to ASTM Test Methods D1556 or D6938. We recommend that field density tests be performed in the utility trench bedding, envelope and backfill for every vertical lift, at an approximate longitudinal spacing of not greater than 150 feet. Backfill that does not conform to the criteria specified in this section should be removed or reworked, as applicable over the trench length represented by the failing test so as to conform to BSK recommendations.

4.8 SURFACE DRAINAGE CONTROL

The control of surface drainage in the project areas is an important design consideration. BSK recommends the final grading around concrete or asphalt pavement must provide for positive and enduring drainage away from the structures, and ponding of water must not be allowed around, near the structures, or on any of the paved surfaces. Paved surfaces next to the structures must have at least a 2 percent gradient away from the structure.

5.0 PLANS AND SPECIFICATIONS REVIEW

BSK recommends that it be retained to review the draft plans and specifications for the project, with regard to foundations and earthwork, prior to their being finalized and issued for construction

bidding.

6.0 CONSTRUCTION TESTING AND OBSERVATIONS

Geotechnical testing and observation during construction is a vital extension of this geotechnical investigation. BSK recommends that it be retained for those services. Field review during site preparation and grading allows for evaluation of the exposed soil conditions and confirmation or revision of the assumptions and extrapolations made in formulating the design parameters and recommendations. BSK's observations must be supplemented with periodic compaction tests to establish substantial conformance with these recommendations. BSK must also be called to the site to observe foundation excavations, prior to placement of reinforcing steel or concrete, in order to assess whether the actual bearing conditions are compatible with the conditions anticipated during the preparation of this report. BSK must also be called to the Site to observe placement of foundation and slab concrete.

If a firm other than BSK is retained for these services during construction, that firm must notify the owner, project designers, governmental building officials, and BSK that the firm has assumed the responsibility for all phases (i.e., both design and construction) of the project within the purview of the geotechnical engineer. Notification must indicate that the firm has reviewed this report and any subsequent addenda, and that it either agrees with BSK's conclusions and recommendations, or that it will provide independent recommendations.

7.0 LIMITATIONS

The analyses and recommendations submitted in this report are based upon the data obtained from the test borings performed at the locations shown on the Boring Location Map, Figure A2. The report does not reflect variations which may occur between or beyond the borings. The nature and extent of such variations may not become evident until construction is initiated. If variations then appear, a re-evaluation of the recommendations of this report will be necessary after performing on-site observations during the excavation period and noting the characteristics of the variations.

The validity of the recommendations contained in this report is also dependent upon an adequate testing and observation program during the construction phase. BSK assumes no responsibility for construction compliance with the design concepts or recommendations unless it has been retained to perform the testing and observation services during construction as described above.

The findings of this report are valid as of the present. However, changes in the conditions of the Site can occur with the passage of time, whether caused by natural processes or the work of man, on this property or adjacent property. In addition, changes in applicable or appropriate standards may occur, whether they result from legislation, governmental policy or the broadening of knowledge.

BSK has prepared this report for the exclusive use of the Client and members of the project design team. The report has been prepared in accordance with generally accepted geotechnical engineering practices which existed in Sacramento County at the time the report was written. No other

warranties either expressed or implied are made as to the professional advice provided under the terms of BSK's agreement with Client and included in this report.

Respectfully submitted

BSK Associates

© BSK Associates. All rights reserved. Reproduction of any part of this document without the written permission of BSK is prohibited.

APPENDIX A

Field Exploration

BSK

APPENDIX A

FIELD EXPLORATION

The field exploration at the Site was conducted on March 11, 2013 under the oversight of a BSK staff member. Seven (7) soil borings were drilled to depths ranging from 11.5 to 16.5 feet bgs. All of the borings were drilled using either a truck-mounted drill rig with hollow stem. The approximate locations of the test borings are indicated on the Boring Location Map, Figure A-2.

The soil materials encountered in the test borings were visually classified in the field, and the logs were recorded during the drilling and sampling operations. Visual classification of the materials encountered in the test borings was made in general accordance with the Unified Soil Classification System (ASTM D 2488). A soil classification chart is presented herein. Boring logs are presented herein and should be consulted for more details concerning subsurface conditions. Stratification lines were approximated by the field staff based on observations made at the time of drilling, while the actual boundaries between soil types may be gradual and soil conditions may vary at other locations.

Subsurface samples were obtained at the successive depths shown on the boring logs by driving samplers which consisted of a 2.5-inch inside diameter (I.D.) California Sampler and a 1.4-inch I.D. Standard Penetration Test (SPT) Sampler. The samplers were driven 18 inches using a 140-pound hammer dropped from a height of 30 inches by means of either an automatic hammer or a down-hole safety hammer. The number of blows required to drive the last 12 inches was recorded as the blow count (blows/foot) on the boring logs. The relatively undisturbed soil core samples were capped at both ends to preserve the samples at their natural moisture content. Soil samples were also obtained using the SPT Sampler lined with metal tubes or unlined in which case the samples were placed and sealed in polyethylene bags. At the completion of the field exploration, the test borings were backfilled with the excavated soil cuttings mixed with betonite clay.

It should be noted that the use of terms such as “loose”, “medium dense”, “dense” or “very dense” to describe the consistency of a soil is based on sampler blow count and is not necessarily reflective of the in-place density or unit weight of the soils being sampled. The relationship between sampler blow count and consistency is provided in the following Tables A-1 and A-2 for coarse-grained (sandy and gravelly) soils and fine grained (silty and clayey) soils, respectively.

BSK Job No. G13-038-10B
April 2013
Figure A-1

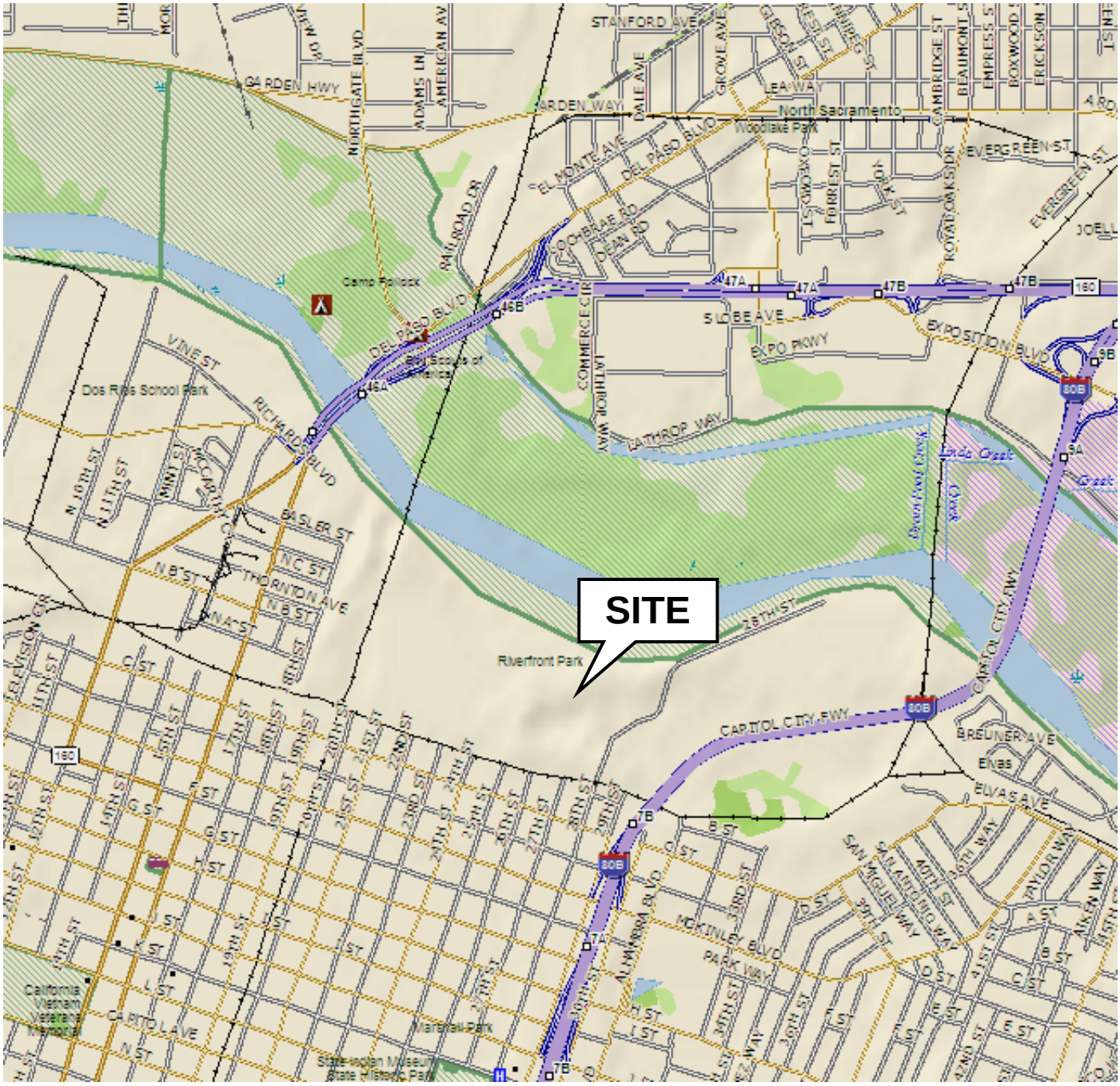

Map Reference:. 3-D TopoQuads Copyright 2009 Delorme Yarmouth, ME 04096

N

Approximate Scale

0 1790 feet

1 inch = 1790 feet

SITE VICINITY MAP

GEOTECHNICAL ENGINEERING INVESTIGATION REPORT
SOLAR PV SYSTEM AT SACRAMENTO LANDFILL
SACRAMENTO, CALIFORNIA

BSK Associates
Engineers & Laboratories

LEGEND

B-1 Approximate Boring Location

BSK Job No. G13-038-10B
April 2013
Figure A-2

Map Reference: Skarphol Associates

Approximate Scale

0 160 feet

1 inch = 160 feet

BORING LOCATION MAP

GEOTECHNICAL ENGINEERING INVESTIGATION REPORT
SOLAR PV SYSTEM AT SACRAMENTO LANDFILL
SACRAMENTO, CALIFORNIA

BSK Associates Engineers & Laboratories

Table A-1: Consistency of Coarse-Grained Soil by Sampler Blow Count		
Consistency Descriptor	**SPT Blow Count (#Blows / Foot)**	**2.5" I.D. California Sampler Blow Count (#Blows / Foot)**
Very Loose	<4	<6
Loose	4 – 10	6 – 15
Medium Dense	10 – 30	15 – 45
Dense	30 – 50	45 – 80
Very Dense	>50	>80

Table A-2: Consistency of Fine-Grained Soil by Sampler Blow Count		
Consistency Descriptor	**SPT Blow Count (#Blows / Foot)**	**2.5" I.D. Cal. Sampler Blow Count (# Blows / Foot)**
Very Soft	<2	<3
Soft	2 – 4	3 – 6
Medium Stiff	4 – 8	6 – 12
Stiff	8 – 15	12 – 24
Very Stiff	15 – 30	24 – 45
Hard	>30	>45

MAJOR DIVISIONS				TYPICAL NAMES
COARSE GRAINED SOILS More than Half >#200	GRAVELS MORE THAN HALF COARSE FRACTION IS LARGER THAN NO. 4 SIEVE	CLEAN GRAVELS WITH LITTLE OR NO FINES	GW	WELL GRADED GRAVELS, GRAVEL-SAND MIXTURES
			GP	POORLY GRADED GRAVELS, GRAVEL- SAND MIXTURES
		GRAVELS WITH OVER 15% FINES	GM	SILTY GRAVELS, POORLY GRADED GRAVEL-SAND-SILT MIXTURES
			GC	CLAYEY GRAVELS, POORLY GRADED GRAVEL-SAND-CLAY MIXTURES
	SANDS MORE THAN HALF COARSE FRACTION IS SMALLER THAN NO. 4 SIEVE	CLEAN SANDS WITH LITTLE OR NO FINES	SW	WELL GRADED SANDS, GRAVELLY SANDS
			SP	POORLY GRADED SANDS, GRAVELLY SANDS
		SANDS WITH OVER 15% FINES	SM	SILTY SANDS, POORLY GRADED SAND-SILT MIXTURES
			SC	CLAYEY SANDS, POORLY GRADED SAND-CLAY MIXTURES
FINE GRAINED SOILS More than Half <#200 sieve	SILTS AND CLAYS LIQUID LIMIT LESS THAN 50		ML	INORGANIC SILTS AND VERY FINE SANDS, ROCK FLOUR, SILTY OR CLAYEY FINE SANDS, OR CLAYEY SILTS WITH SLIGHT PLASTICITY
			CL	INORGANIC CLAYS OF LOW TO MEDIUM PLASTICITY, GRAVELLY CLAYS, SANDY CLAYS, SILTY CLAYS, LEAN CLAYS
			OL	ORGANIC CLAYS AND ORGANIC SILTY CLAYS OF LOW PLASTICITY
	SILTS AND CLAYS LIQUID LIMIT GREATER THAN 50		MH	INORGANIC SILTS , MICACEOUS OR DIATOMACIOUS FINE SANDY OR SILTY SOILS, ELASTIC SILTS
			CH	INORGANIC CLAYS OF HIGH PLASTICITY, FAT CLAYS
			OH	ORGANIC CLAYS OF MEDIUM TO HIGH PLASTICITY, ORGANIC SILTS
HIGHLY ORGANIC SOILS			Pt	PEAT AND OTHER HIGHLY ORGANIC SOILS

Note: Dual symbols are used to indicate borderline soil classifications.

	Pushed Shelby Tube	RV	R-Value
	Standard Penetration Test	SA	Sieve Analysis
	Modified California	SW	Swell Test
	Auger Cuttings	TC	Cyclic Triaxial
	Grab Sample	TX	Unconsolidated Undrained Triaxial
	Sample Attempt with No Recovery	TV	Torvane Shear
CA	Chemical Analysis	UC	Unconfined Compression
CN	Consolidation	(1.2)	(Shear Strength, ksf)
CP	Compaction	WA	Wash Analysis
DS	Direct Shear	(20)	(with % Passing No. 200 Sieve)
PM	Permeability		Water Level at Time of Drilling
PP	Pocket Penetrometer		Water Level after Drilling (with date measured)

SOIL CLASSIFICATION CHART AND KEY TO TEST DATA
Unified Soil Classification System

BSK Associates Engineers & Laboratories

Figure A-3

BSK Associates
700 22nd street
Bakersfield CA 93301
Telephone: 661.327.0671
Fax: 661.324.4218

LOG OF BORING NO. B-1

Project Name: **Solar PV Systems**

Location: **Sacramento, California**

Job Number: **G13 038 10B**

Plate

Surface El.:

Location:

Depth, feet	Graphic Log	MATERIAL DESCRIPTION	Samples	Sample Number	Penetration Blows / Foot	Pocket Penetrometer, TSF	% Passing No. 200 Sieve	In-Situ Dry Weight (pcf)	In-Situ Moisture Content (%)	Liquid Limit	Plastic Limit	Plasticity Index
		Approximately 3 inches of Asphalt Concrete.										
		GM: SANDY SILT GRAVEL: Dark grey; some hard debris (concrete); damp (fill).										
		...MEDIUM DENSE SANDY SILT GRAVEL: Dark grey; some hard debris (concrete); damp (fill). CH4 = 10%; O2 = 8%	■		27			97	23			
5		...with concrete debris (fill).	■		52			124	8			
10		GP: DENSE SANDY GRAVEL: Grey; Damp. CH4 = 2%	■		19, 50/ 2"							
		SP: DENSE SAND AND SANDY CLAY: Dark gray; saturated backfilled with soil cuttings mix (fill).	■		8, 50/ 6"			106	24			
15		Boring Terminated at 16 feet.										
20												
25												

Completion Depth: **16.0**
Date Started: **3/11/13**
Date Completed: **3/11/13**
Logged By: **Martin B. Cline**
Checked By: **O. Lau**

Drilling Equipment and Method: Gregg Drilling

Remarks: Boring terminated at 16 feet. Boring backfilled with soil cuttings. Groundwater was not encountered.

BSK Associates
700 22nd street
Bakersfield CA 93301
Telephone: 661.327.0671
Fax: 661.324.4218

LOG OF BORING NO. B-2

Project Name: **Solar PV Systems**

Location: **Sacramento, California**

Job Number: **G13 038 10B**

Plate

Surface El.:

Location:

Depth, feet	Graphic Log	MATERIAL DESCRIPTION	Samples	Sample Number	Penetration Blows / Foot	Pocket Penetrometer, TSF	% Passing No. 200 Sieve	In-Situ Dry Weight (pcf)	In-Situ Moisture Content (%)	Liquid Limit	Plastic Limit	Plasticity Index
		Approximately 7 inches of asphalt concrete.										
		GM: VERY STIFF SILTY SANDY GRAVEL: Gray; damp. (Fill) CH4 = 1%										
		ML: VERY SOFT GRAVELLY SANDY SILT: Dark gray; damp. (Fill) CH4 = 20%	■		28			115 120	10 12			
		...hard drill debris (Landfill Debris)										
5			■		2							
		...MEDIUM DENSE SANDY SILT: Dark gray; with debris; wood, fiber etc., wet. (Landfill Debris)	■		7			105	21			
10		CL: STIFF SILTY CLAY W/ SAND: Dark gray; moist. (Landfill Debris)	■		16			131	24			
		Boring Terminated at 11.5 feet.										
15												
20												
25												

Completion Depth: **11.5**
Date Started: **3/11/13**
Date Completed: **3/11/13**
Logged By: **Martin B. Cline**
Checked By: **O. Lau**

Drilling Equipment and Method: Gregg Drilling

Remarks: Boring terminated at 11.5 feet. Boring backfilled with soil cuttings. Groundwater was not encountered.

BSK Associates
700 22nd street
Bakersfield CA 93301
Telephone: 661.327.0671
Fax: 661.324.4218

LOG OF BORING NO. B-3

Project Name: **Solar PV Systems**

Location: **Sacramento, California**

Job Number: **G13 038 10B**

Plate

Surface El.:

Location:

Depth, feet	Graphic Log	MATERIAL DESCRIPTION	Samples	Sample Number	Penetration Blows / Foot	Pocket Penetrometer, TSF	% Passing No. 200 Sieve	In-Situ Dry Weight (pcf)	In-Situ Moisture Content (%)	Liquid Limit	Plastic Limit	Plasticity Index
		Wood Chips										
		GP-GM: SANDY GRAVEL: Dark grey; with some silty clayey lenses. (Fill)										
		...MEDIUM DENSE SANDY GRAVEL: Dark grey; with some silty clayey lenses. CH4 = 10%	■		37			103 121	9 10			
5		SC: MEDIUM DENSE CLAY GRAVELLY SAND: Dark gray; odor; moist-wet. (Fill) CH4 = 3%	■		24			112	11			
10		...LOOSE no recovery refuge, wet. (Landfill Debris) CH4= 30% O2 = 3%	■		13			72	19			
		...DENSE CLAY GRAVELLY SAND: Dark gray; odor; moist-wet. (Landfill Debris)										
15			■		50/ 3"							
		Boring Terminated at 16.5 feet.										
20												
25												

Completion Depth: **16.5**
Date Started: **3/11/13**
Date Completed: **3/11/13**
Logged By: **Martin B. Cline**
Checked By: **O. Lau**

Drilling Equipment and Method: Gregg Drilling

Remarks: Boring terminated at 16.5 feet. Boring backfilled with soil cuttings. Groundwater was not encountered.

BSK Associates
700 22nd street
Bakersfield CA 93301
Telephone: 661.327.0671
Fax: 661.324.4218

LOG OF BORING NO. B-4

Project Name: **Solar PV Systems**

Location: **Sacramento, California**

Job Number: **G13 038 10B**

Plate

Surface El.:

Location:

Depth, feet	Graphic Log	MATERIAL DESCRIPTION	Samples	Sample Number	Penetration Blows / Foot	Pocket Penetro-meter, TSF	% Passing No. 200 Sieve	In-Situ Dry Weight (pcf)	In-Situ Moisture Content (%)	Liquid Limit	Plastic Limit	Plasticity Index
		Approximately 4 inches of asphalt.										
		GP-GM:SANDY GRAVEL: Light gray.										
		...GRAVELLY SANDY SILT: Dark gray; moist. (FIII)										
		SM: SILTY SAND: Light gray; moist. (Fill)										
		...MEDIUM DENSE SILTY SAND: Light gray; moist. (Fill) CH4 = 1%	■		18			104	18			
5		ML: MEDIUM STIFF SANDY SILT: Gray; trace of Asphalt Concrete fragments; moist to wet. (Landfill debris) CH4 = 1%	■		10			105	19			
10		... with some refuse (Landfill debris)	■		9			78	28			
15		SM: MEDIUM DENSE SILTY SAND: Dark gray; garbage; lots of glass fragments; and moist. (Landfill debris)	■		23			91	19			
		Boring Terminated at 16.5 feet.										
20												
25												

Completion Depth: **16.5**
Date Started: **3/11/13**
Date Completed: **3/11/13**
Logged By: **Martin B. Cline**
Checked By: **O. Lau**

Drilling Equipment and Method: Gregg Drilling

Remarks: Boring terminated at 16.5 feet. Boring backfilled with soil cuttings. Groundwater was not encountered.

BSK Associates
700 22nd street
Bakersfield CA 93301
Telephone: 661.327.0671
Fax: 661.324.4218

LOG OF BORING NO. B-5

Project Name: **Solar PV Systems**

Location: **Sacramento, California**

Job Number: **G13 038 10B**

Plate

Surface El.:

Location:

Depth, feet	Graphic Log	MATERIAL DESCRIPTION	Samples	Sample Number	Penetration Blows / Foot	Pocket Penetrometer, TSF	% Passing No. 200 Sieve	In-Situ Dry Weight (pcf)	In-Situ Moisture Content (%)	Liquid Limit	Plastic Limit	Plasticity Index
		Approximately 4 inches asphalt concrete over silty sand gravel.										
		SM: SILTY SAND: Gray; moist. (Fill)										
		..very fine sand; some gravels (Fill)	■		21			113	10			
		...MEDIUM DENSE SILTY SAND: Gray; moist. (Fill)										
5		...MEDIUM DENSE...debris-gravels.(Landfill debris)	■		25				16			
10		ML: SANDY SILT WITH REFUSE: Dark gray; moist. (Landfill debris)	■		9			83	19			
		Boring Terminated at 11.5 feet.										
15												
20												
25												

Completion Depth: **11.5**
Date Started: **3/11/13**
Date Completed: **3/11/13**
Logged By: **Martin B. Cline**
Checked By: **O. Lau**

Drilling Equipment and Method: Gregg Drilling

Remarks: Boring terminated at 11.5 feet. Boring backfilled with soil cuttings. Groundwater was not encountered.

BSK Associates
700 22nd street
Bakersfield CA 93301
Telephone: 661.327.0671
Fax: 661.324.4218

LOG OF BORING NO. B-6

Project Name: **Solar PV Systems**

Location: **Sacramento, California**

Job Number: **G13 038 10B**

Plate

Surface El.:

Location:

Depth, feet	Graphic Log	MATERIAL DESCRIPTION	Samples	Sample Number	Penetration Blows / Foot	Pocket Penetrometer, TSF	% Passing No. 200 Sieve	In-Situ Dry Weight (pcf)	In-Situ Moisture Content (%)	Liquid Limit	Plastic Limit	Plasticity Index
		Approximately 4 inches of Asphalt Concrete over Sandy Gravel.										
		SP: GRAVELLY SAND WITH DEBRIS: Dark gray; some wood; some silt; moist. (Fill) CH4 = 26%										
		SC: GRAVELLY SANDY CLAY: Dark gray; moist; debris. CH4 = 16%; O2 = 1%.	■		22, 50/ 3"							
5		...SANDY WITH GRAVEL: Refuse; dark gray; debris; and moist. (Landfill debris)	■		32			102	8			
10		...GRAVELLY SAND WITH DEBRIS: Dark gray; moist. (Landfill debris)	■		6							
15		...GRAVELLY SAND WITH DEBRIS: Dark gray; moist. (Landfill debris)	■		6			89	16			
		Boring Terminated at 15.6 feet.										
20												
25												

Completion Depth: **16.5**
Date Started: **3/11/13**
Date Completed: **3/11/13**
Logged By: **Martin B. Cline**
Checked By: **O. Lau**

Drilling Equipment and Method: Gregg Drilling

Remarks: Boring terminated at 16.5 feet. Boring backfilled with soil cuttings. Groundwater was not encountered.

BSK Associates
700 22nd street
Bakersfield CA 93301
Telephone: 661.327.0671
Fax: 661.324.4218

LOG OF BORING NO. B-7

Project Name: **Solar PV Systems**

Location: **Sacramento, California**

Job Number: **G13 038 10B**

Plate

Surface El.:

Location:

Depth, feet	Graphic Log	MATERIAL DESCRIPTION	Samples	Sample Number	Penetration Blows / Foot	Pocket Penetrometer, TSF	% Passing No. 200 Sieve	In-Situ Dry Weight (pcf)	In-Situ Moisture Content (%)	Liquid Limit	Plastic Limit	Plasticity Index
		Approximately 4 inches of Asphalt Concrete over Sandy Gravel.										
		SM: SILTY SAND: Dark Brown; moist.										
		...SANDY GRAVELLY: Dark gray; damp. (Fill)										
		...SILTY SAND: Dark Brown; moist.	■		57			115	3			
5		...SILTY SAND: Dark gray;	■		21			119	6			
10		ML: SANDY CLAYEY SILT: Dark gray; wet. (Fill)	■		4			109 98	17 25			
		Boring Terminated at 10.5 feet.										
15												
20												
25												

Completion Depth: **11.5**
Date Started: **3/11/13**
Date Completed: **3/11/13**
Logged By: **Martin B. Cline**
Checked By: **O. Lau**

Drilling Equipment and Method: Gregg Drilling

Remarks: Boring terminated at 11.5 feet. Boring backfilled with soil cuttings. Groundwater was not encountered.

APPENDIX B

Laboratory Testing Results

BSK

APPENDIX B

LABORATORY TESTING

Moisture-Density Tests

The field moisture content, as a percentage of dry weight of the soils, was determined by weighing the samples before and after oven drying in accordance with ASTM D 2216 test procedures. Dry densities, in pounds per cubic foot, were also determined for undisturbed core samples in general accordance with ASTM D 2937 test procedures. Test results are presented on the boring logs in Appendix A.

Direct Shear Test

Two (2) direct shear tests were performed on in-situ soil samples from selected borings. The tests were conducted to determine the soil strength characteristics. The standard test method is ASTM D 3080, Direct Shear Test for Soil under Consolidated Drained Conditions. The results of the direct shear test are presented graphically on Figures B-1 and B-2.

Consolidation Test

Five (5) consolidation tests were performed on a relatively undisturbed soil sample to evaluate compressibility and collapse potential characteristics. The tests were performed in general accordance with ASTM D 2435. The sample was initially loaded under as-received moisture content to a selected stress level, was then saturated, and then incrementally loaded up to a maximum load of 5200 psf. The test results are presented on Figure B-3 through B-7.

Expansion Index Test

One (1) Expansion Index Test was performed on bulk soil sample taken from the Site area. The test was performed in general accordance with UBC Standard 18-2. The test result is presented on Figure B-8.

Soil Corrosivity

The results of chemical analyses performed on a selected soil sample using California Test Method 643 (for pH) and EPA Test Methods 300.0 (for soluble sulfate and chlorides) and 9045C (for pH) are presented in Table B-1 below.

Table B-1: Summary of Corrosion Test Results

Sample Location	B-1 @ 0’ – 5’ bgs	B-3@0’ – 10’ bgs	B-5 @ 0’ – 5’ bgs	B-7@ 0’ – 5’ bgs
pH	**10.3**	**8.3**	**8.8**	**8.8**
Sulfate, ppm	Not detected	Not detected	Not detected	Not detected
Chloride, ppm	Not detected	Not detected	Not detected	25

BSK PROJECT:	Solar PV System at Sacramento Landfill	April 2013
PROJECT NUMBER:	G13-038-10B	
SAMPLE ID:	B-1 @ 2'	
DRY DENSITY (pcf):	97	
MOISTURE CONTENT (%):	23	
INTERNAL FRICTION ANGLE, φ (degrees)	30	
COHESION, c (ksf):	0.39	
TEST METHOD:	ASTM D-3080: DIRECT SHEAR TEST	

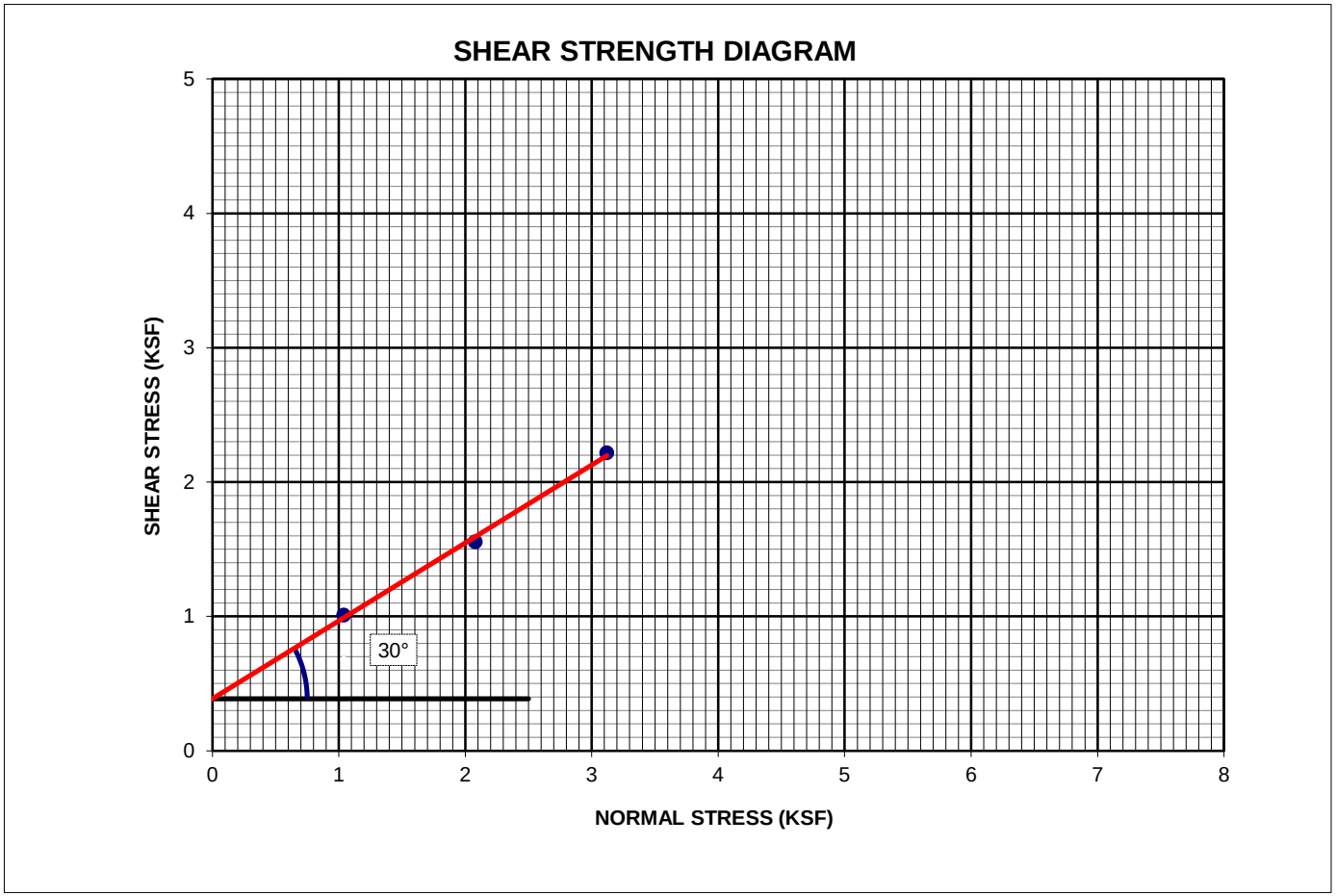

Figure B-1

BSK Associates Engineers & Laboratories

BSK PROJECT:	Solar PV System at Sacramento Landfill	April 2013
PROJECT NUMBER:	G13-038-10B	
SAMPLE ID:	B-7 @ 5'	
DRY DENSITY (pcf):	119	
MOISTURE CONTENT (%):	6	
INTERNAL FRICTION ANGLE, φ (degrees)	26	
COHESION, c (ksf):	0.56	
TEST METHOD:	ASTM D-3080: DIRECT SHEAR TEST	

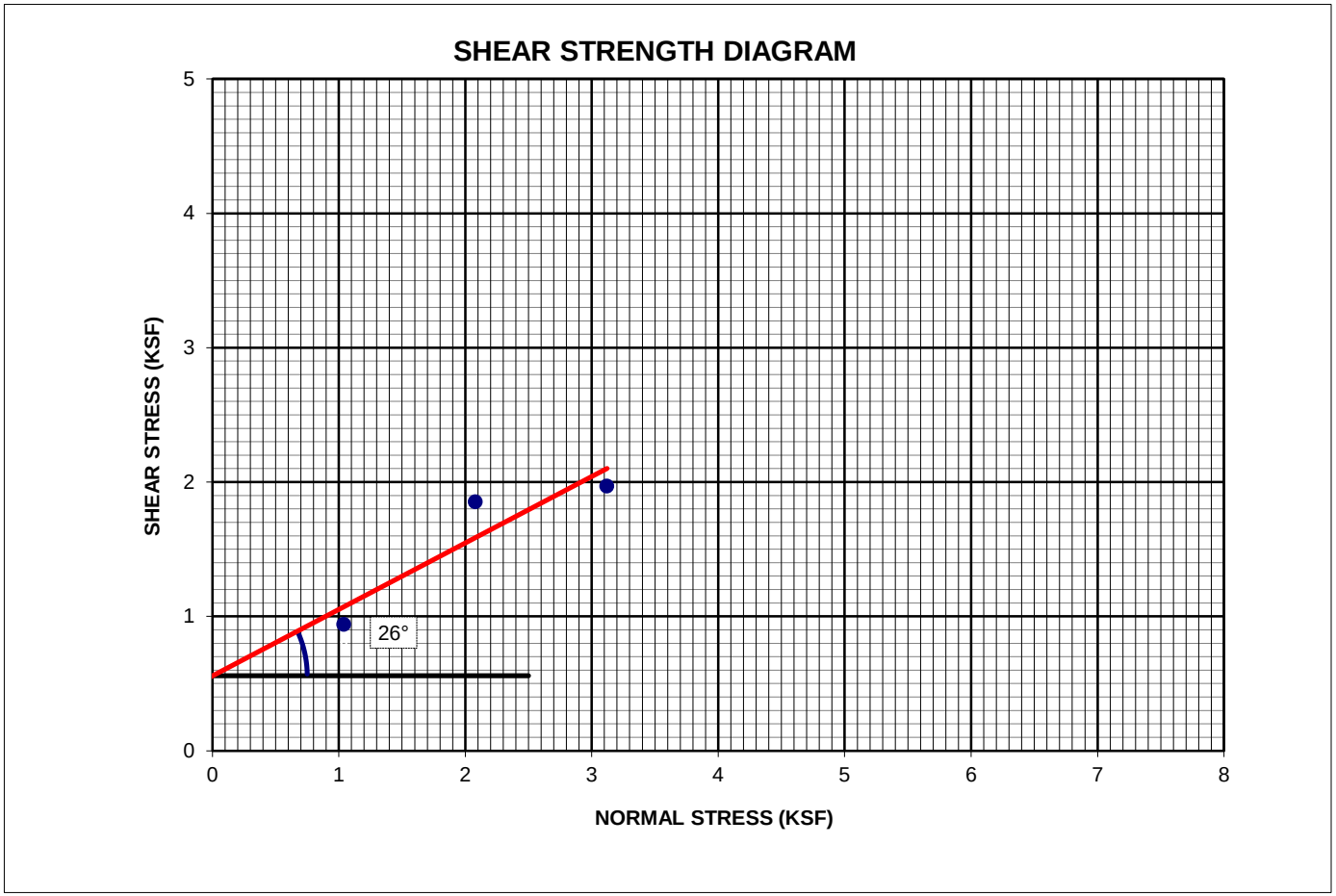

Figure B-2

BSK Associates Engineers & Laboratories

BSK PROJECT:	Solar PV System	April 2013
PROJECT NUMBER:	G13-038-10B	
SAMPLE ID:	B- 1 @ 15 feet bgs	
DRY DENSITY (pcf):	106	
INITIAL MOISTURE CONTENT (%):	24	
COLLAPSE POTENTIAL:	-0.01 percent collapse at 1300 psf	
TEST METHOD:	ASTM D-2435: ONE DIMENSIONAL CONSOLIDATION TEST	
PEAK LOAD (psf):	5200	

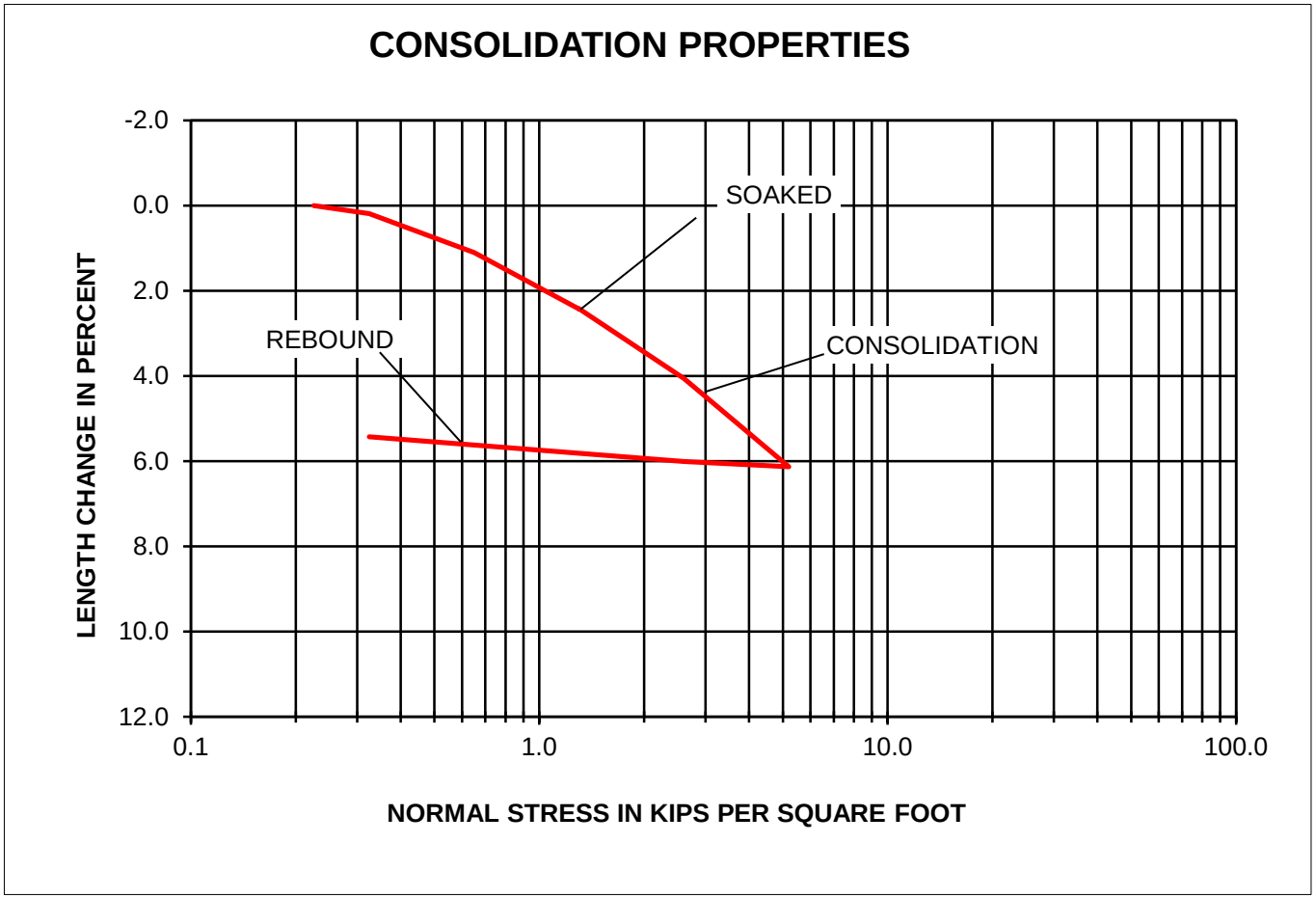

Figure B-3

BSK Associates Engineers & Laboratories

BSK PROJECT:	Solar PV System	April 2013
PROJECT NUMBER:	G13-038-10B	
SAMPLE ID:	B- 2 @ 10 feet bgs	
DRY DENSITY (pcf):	131	
INITIAL MOISTURE CONTENT (%):	24	
COLLAPSE POTENTIAL:	1.46 percent collapse at 1300 psf	
TEST METHOD:	ASTM D-2435: ONE DIMENSIONAL CONSOLIDATION TEST	
PEAK LOAD (psf):	5200	

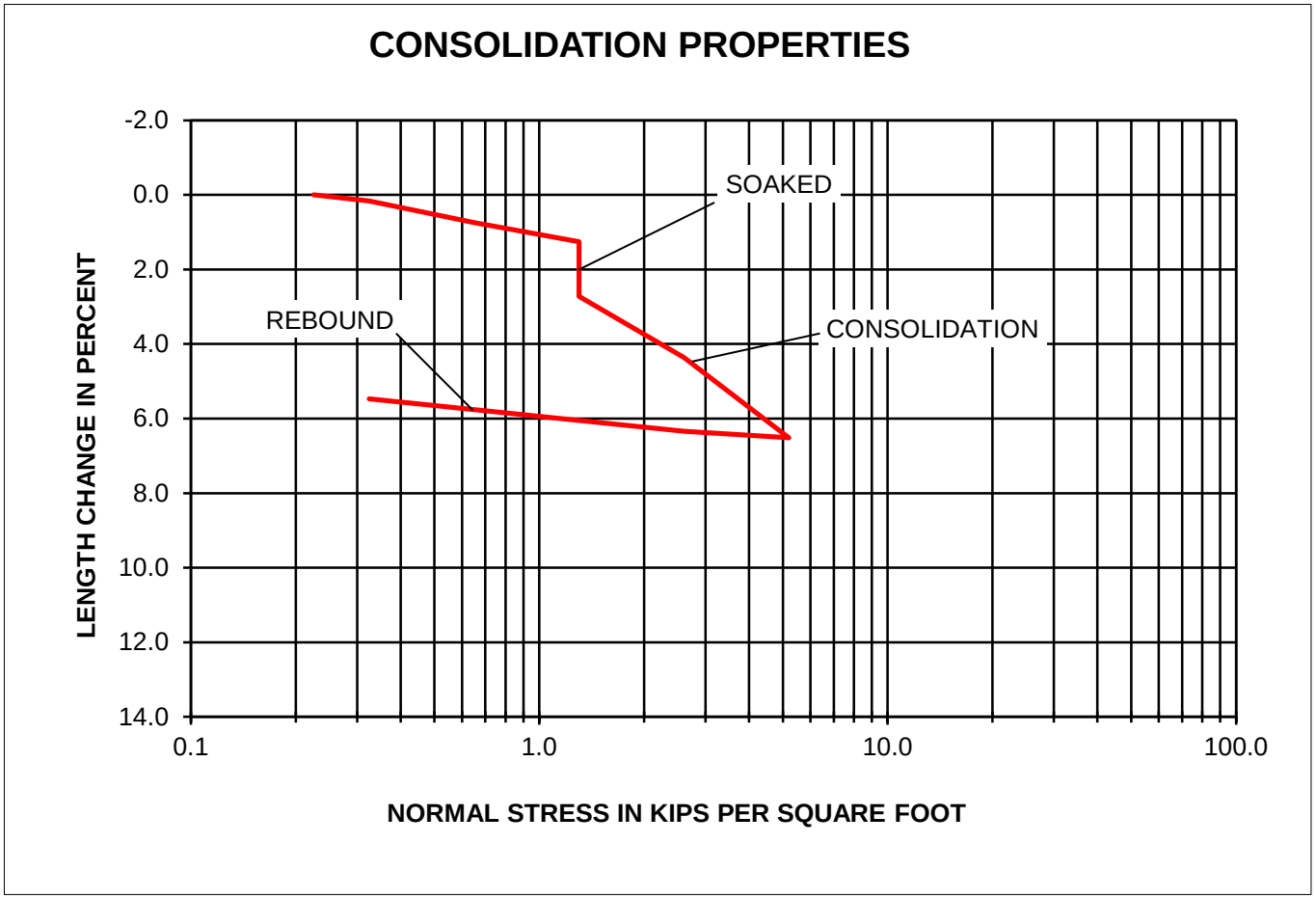

Figure B-4

BSK Associates Engineers & Laboratories

BSK PROJECT:	Solar PV System	April 2013
PROJECT NUMBER:	G13-038-10B	
SAMPLE ID:	B- 4 @ 5 feet bgs	
DRY DENSITY (pcf):	105	
INITIAL MOISTURE CONTENT (%):	19	
COLLAPSE POTENTIAL:	0 percent collapse at 1300 psf	
TEST METHOD:	ASTM D-2435: ONE DIMENSIONAL CONSOLIDATION TEST	
PEAK LOAD (psf):	5200	

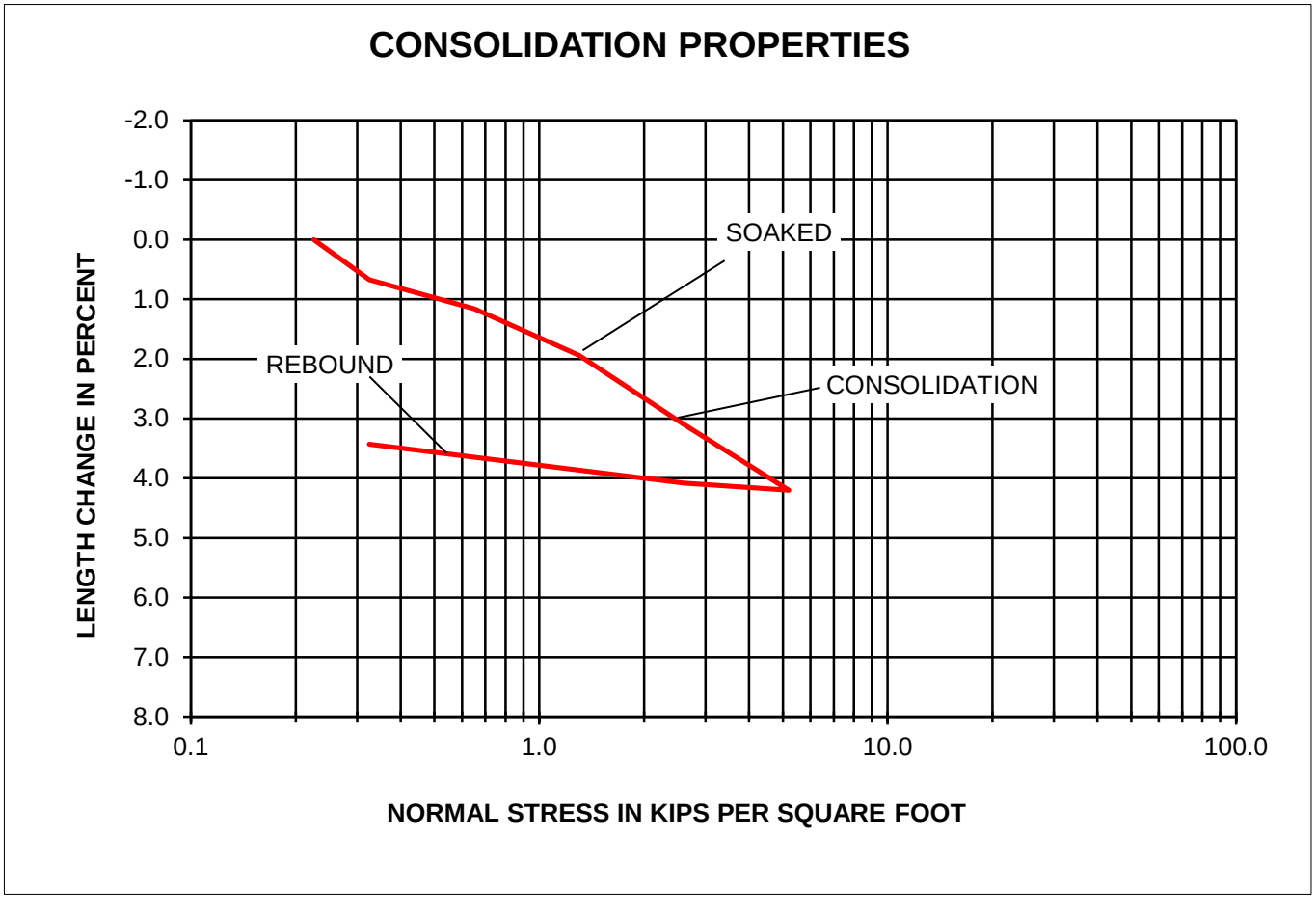

Figure B-5

BSK Associates Engineers & Laboratories

BSK PROJECT:	Solar PV System	April 2013
PROJECT NUMBER:	G13-038-10B	
SAMPLE ID:	B- 6 @ 5 feet bgs	
DRY DENSITY (pcf):	102	
INITIAL MOISTURE CONTENT (%):	8	
COLLAPSE POTENTIAL:	0 percent collapse at 1300 psf	
TEST METHOD:	ASTM D-2435: ONE DIMENSIONAL CONSOLIDATION TEST	
PEAK LOAD (psf):	5200	

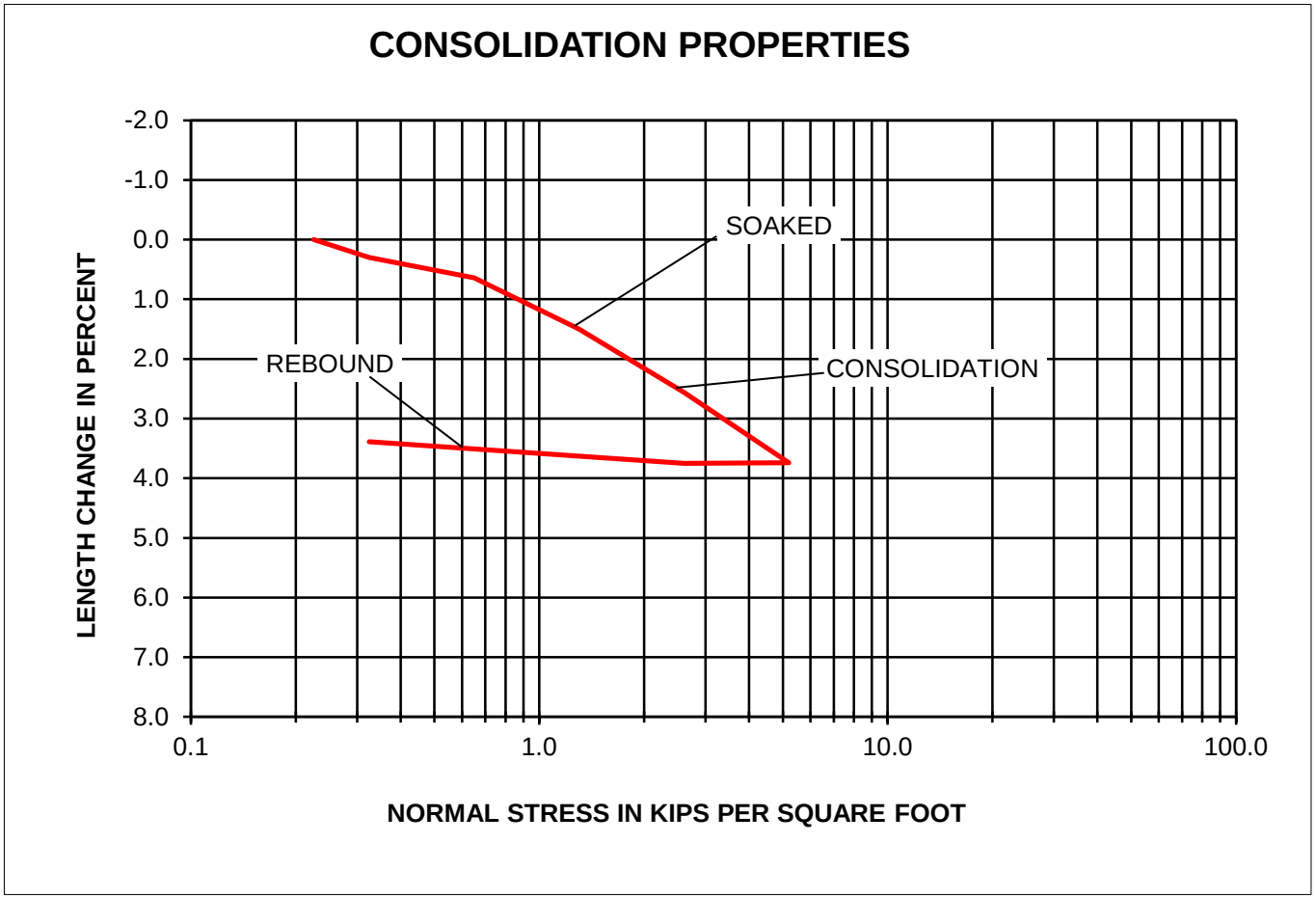

Figure B-6

BSK Associates Engineers & Laboratories

BSK PROJECT:	Solar PV System	April 2013
PROJECT NUMBER:	G13-038-10B	
SAMPLE ID:	B- 6 @ 15 feet bgs	
DRY DENSITY (pcf):	89	
INITIAL MOISTURE CONTENT (%):	16	
COLLAPSE POTENTIAL:	0 percent collapse at 1300 psf	
TEST METHOD:	ASTM D-2435: ONE DIMENSIONAL CONSOLIDATION TEST	
PEAK LOAD (psf):	5200	

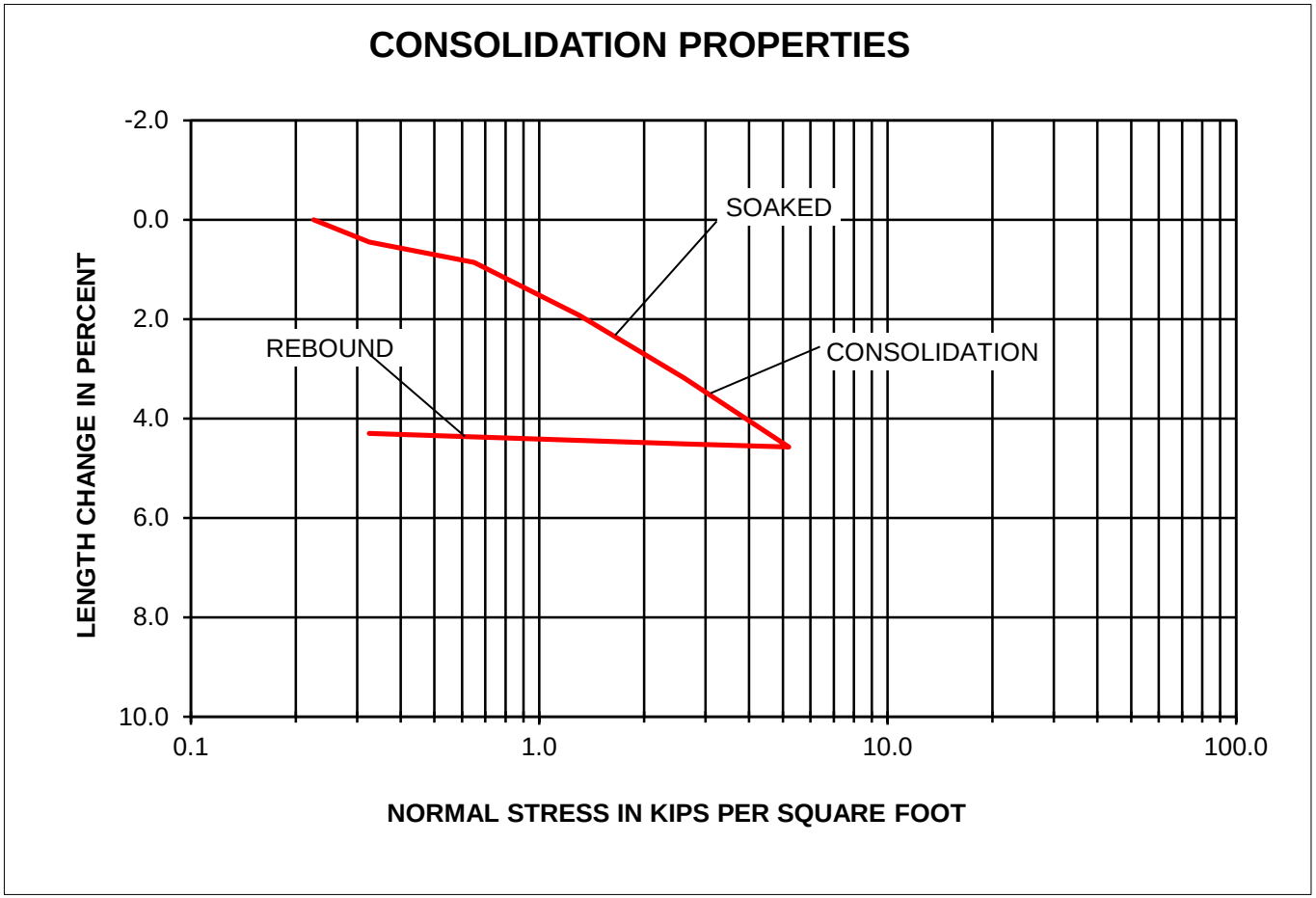

Figure B-7

BSK Associates Engineers & Laboratories

BSK Associates
Engineers & Laboratories

700 22nd Street
Bakersfield, CA 93301
Ph: (661) 327-0671
Fax: (661) 324-4218

EXPANSION INDEX OF SOILS

ASTM D 4829 / UBC STANDARD 18-2

Project Name: Solar PV System

Project Number: G13 038 10B **Sample Date:** 3/11/2013

Lab Tracking ID: **Test Date:** 3/21/2013

Sample Location: B-1 @ 0' - 15'

Sample Source Native

Sampled By: M.Cline **Tested By:** I. Pacheco **Reviewed By:** On Man Lau

TEST DATA

INITIAL SET-UP DATA		FINAL TAKE-DOWN DATA	
Sample + Tare Weight (g)	673.0	Sample + Tare Weight (g)	696.9
Tare Weight (g)	266.6	Tare Weight (g)	266.6
Moisture Content Data		**Moisture Content Data**	
Wet Weight + Tare	156.0	Wet Weight + Tare	696.9
Dry Weight + Tare	143.2	Dry Weight + Tare	630.5
Tare Weight (g)	0	Tare Weight (g)	266.6
Moisture Content (%)	8.9%	Moisture Content (%)	18.2%
Initial Volume (ft^3)	0.007272	Final Volume (ft^3)	0.007279
Remolded Wet Density (pcf)	123.2	Final Wet Density (pcf)	130.3
Remolded Dry Density (pcf)	113.1	Final Dry Density (pcf)	110.2
Degree of Saturation	**49**	**Degree of Saturation**	**93**

EXPANSION READINGS

Initial Gauge Reading (in)	0.2192
Final Gauge Reading (in)	0.2202
Expansion (in)	0.001

Uncorrected Expansion Index	**1**
Corrected Expansion Index, EI	**1**

Classification of Expansive Soil

EI	Potential Expansion
0 - 20	Very Low
21 - 50	Low
51 - 90	Medium
91 - 130	High
>130	Very High

Remarks: The material has very low expansion potential.

Figure B-8

APPENDIX C

Reference Report Boring Logs (Dated February 23, 2005)

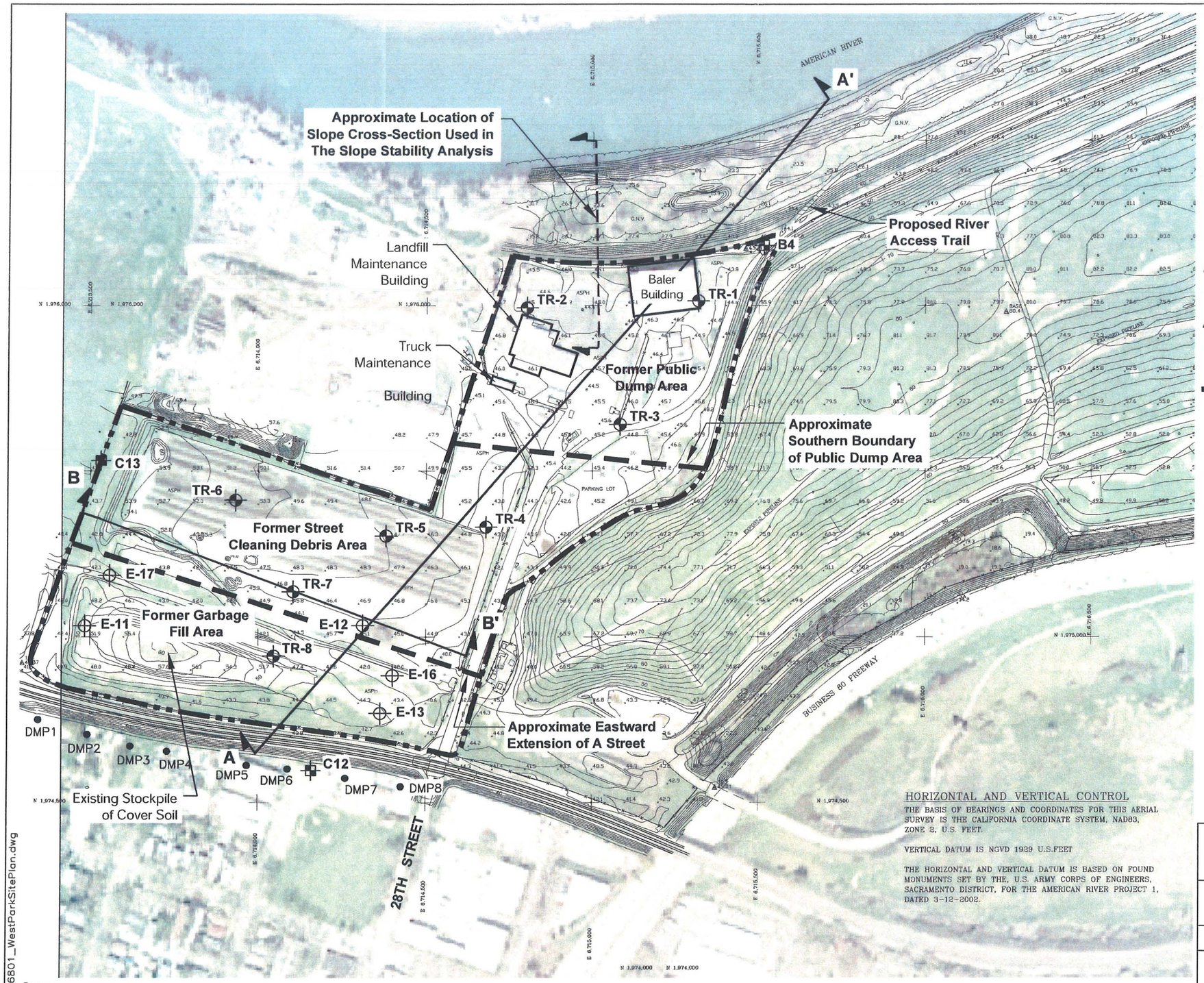

HORIZONTAL AND VERTICAL CONTROL

THE BASIS OF BEARINGS AND COORDINATES FOR THIS AERIAL SURVEY IS THE CALIFORNIA COORDINATE SYSTEM, NAD83, ZONE 2, U.S. FEET.

VERTICAL DATUM IS NGVD 1929 U.S.FEET

THE HORIZONTAL AND VERTICAL DATUM IS BASED ON FOUND MONUMENTS SET BY THE, U.S. ARMY CORPS OF ENGINEERS, SACRAMENTO DISTRICT, FOR THE AMERICAN RIVER PROJECT 1, DATED 3-12-2002.

EXPLANATION

TR-1	Approximate boring location by Treadwell & Rollo, Inc., March 2004
E-11	Approximate boring location by Espana Geotechnical, November 2001
B4	Approximate location of existing groundwater monitoring well
DMP6	Approximate location of landfill gas monitoring probe
A A'	Idealized cross section location
	Cross section slope stability analysis (refer to Appendix E for the configuration)
	Limit of the west park portion of the Sutter's Landing Park Development

0 150 300 Feet

Approximate scale

SUTTER'S LANDING PARK
Sacramento, California

WEST SITE PLAN

Date 08/26/04	Project No. 3868.01	Figure 4.1

Treadwell&Rollo

386801_WestParkSitePlan.dwg

Reference:

UNIFIED SOIL CLASSIFICATION SYSTEM

Major Divisions		Symbols	Typical Names
Coarse-Grained Soils (more than half of soil > no. 200 sieve size	Gravels (More than half of coarse fraction > no. 4 sieve size)	GW	Well-graded gravels or gravel-sand mixtures, little or no fines
		GP	Poorly-graded gravels or gravel-sand mixtures, little or no fines
		GM	Silty gravels, gravel-sand-silt mixtures
		GC	Clayey gravels, gravel-sand-clay mixtures
	Sands (More than half of coarse fraction < no. 4 sieve size)	SW	Well-graded sands or gravelly sands, little or no fines
		SP	Poorly-graded sands or gravelly sands, little or no fines
		SM	Silty sands, sand-silt mixtures
		SC	Clayey sands, sand-clay mixtures
Fine -Grained Soils (more than half of soil < no. 200 sieve size)	Silts and Clays LL = < 50	ML	Inorganic silts and clayey silts of low plasticity, sandy silts, gravelly silts
		CL	Inorganic clays of low to medium plasticity, gravelly clays, sandy clays, lean clays
		OL	Organic silts and organic silt-clays of low plasticity
	Silts and Clays LL = > 50	MH	Inorganic silts of high plasticity
		CH	Inorganic clays of high plasticity, fat clays
		OH	Organic silts and clays of high plasticity
Highly Organic Soils		PT	Peat and other highly organic soils

GRAIN SIZE CHART

Classification	Range of Grain Sizes: U.S. Standard Sieve Size	Range of Grain Sizes: Grain Size in Millimeters
Boulders	Above 12"	Above 305
Cobbles	12" to 3"	305 to 76.2
Gravel	3" to No. 4	76.2 to 4.76
coarse	3" to 3/4"	76.2 to 19.1
fine	3/4" to No. 4	19.1 to 4.76
Sand	No. 4 to No. 200	4.76 to 0.074
coarse	No. 4 to No. 10	4.76 to 2.00
medium	No. 10 to No. 40	2.00 to 0.420
fine	No. 40 to No. 200	0.420 to 0.074
Silt and Clay	Below No. 200	Below 0.074

▽ Unstabilized groundwater level

▼ Stabilized groundwater level

SAMPLE DESIGNATIONS/SYMBOLS

- Sample taken with split-barrel sampler other than Standard Penetration Test sampler. Darkened area indicates soil recovered
- Classification sample taken with Standard Penetration Test sampler
- Undisturbed sample taken with thin-walled tube
- Disturbed sample
- Sampling attempted with no recovery
- Core sample
- Analytical laboratory sample
- Sample taken with Direct Push sampler

SAMPLER TYPE

C	Core barrel
CA	California split-barrel sampler with 2.5-inch outside diameter and a 1.93-inch inside diameter
D&M	Dames & Moore piston sampler using 2.5-inch outside diameter, thin-walled tube
O	Osterberg piston sampler using 3.0-inch outside diameter, thin-walled Shelby tube
PT	Pitcher tube sampler using 3.0-inch outside diameter, thin-walled Shelby tube
S&H	Sprague & Henwood split-barrel sampler with a 3.0-inch outside diameter and a 2.43-inch inside diameter
SPT	Standard Penetration Test (SPT) split-barrel sampler with a 2.0-inch outside diameter and a 1.5-inch inside diameter
ST	Shelby Tube (3.0-inch outside diameter, thin-walled tube) advanced with hydraulic pressure

SUTTER'S LANDING PARK
Sacramento, California

Treadwell&Rollo

CLASSIFICATION CHART

Date 03/16/04 | Project No. 3868.01 | Figure A-9

PROJECT:	SUTTER'S LANDING PARK Sacramento, California	**Log of Boring TR-1**	PAGE 1 OF 3

Boring location:	See Site Plan, Figure 2		Logged by: R. Nelson
Date started:	3/1/04	Date finished: 3/1/04	
Drilling method:	Hollow-stem auger		
Hammer weight/drop:	140 lbs./30 inches	Hammer type: Automatic	LABORATORY TEST DATA
Sampler:	Sprague & Henwood (S&H), Standard Penetration Test (SPT)		

DEPTH (feet)	SAMPLES: Sampler Type	SAMPLES: Sample	SAMPLES: SPT N-Value[1]	LITHOLOGY	MATERIAL DESCRIPTION Ground Surface Elevation: 45 feet[2]	Type of Strength Test	Confining Pressure Lbs/Sq Ft	Shear Strength Lbs/Sq Ft	Fines %	Natural Moisture Content, %	Dry Density Lbs/Cu Ft
					Four-inch-thick asphalt-concrete						
1					Aggregate base						
2											
3	S&H		29	CL	CLAY with SAND and GRAVEL (CL) dark brown, very stiff, moist, fine sand, fine to coarse gravel, some crushed asphalt and rubble						
4											
5					CLAY with SAND (CH) dark brown, medium stiff, moist, coarse sand, with copper, wood, and metal						
6	S&H		6	CH	methane concentration = 10% LEL stopped drilling for 10 minutes						
7					Five feet from borehole, methane concentration = 0% LEL						
8	S&H		34		LANDFILL DEBRIS						
9					methane concentration = 20% LEL, stopped drilling for 10 minutes.						
10					Soil (60%), wood (25%), metal (5%), concrete (10%), trace of glass						
11	S&H		10								
12											
13	S&H		18								
14											
15											
16	S&H		12								
17											
18											
19											
20					soil (50%), wood (40%), brick (10%)						
21	S&H		9								
22											
23											
24					SAND (SP) light gray, medium dense, moist, fine to medium sand						
25											
26	S&H		20								
27				SP							
28					PID = 0 ppm methane concentration = 7% LEL at breathing space						
29											
30											

FILL

LANDFILL DEBRIS

Treadwell&Rollo

Project No.:	Figure:
3868.01	A-1a

TEST GEOTECH LOG 386801.GPJ TR.GDT 7/14/04

PROJECT: **SUTTER'S LANDING PARK**
Sacramento, California

Log of Boring TR-1

DEPTH (feet)	SAMPLES: Sampler Type	SAMPLES: Sample	SAMPLES: SPT N-Value[1]	LITHOLOGY	MATERIAL DESCRIPTION	LABORATORY TEST DATA: Type of Strength Test	Confining Pressure Lbs/Sq Ft	Shear Strength Lbs/Sq Ft	Fines %	Natural Moisture Content, %	Dry Density Lbs/Cu Ft
31	S&H		15	SP	SAND (SP) (continued)						
32	SPT		12		▽ (3/1/04)						
33											
34				SP-SM	SAND with SILT (SP-SM) brown, loose to medium dense, wet, fine to medium sand						
35											
36	SPT		12						9.0		
37	S&H		8								
38											
39											
40					medium dense						
41	S&H		13								
42	SPT		20								
43											
44											
45					SAND with SILT (SP-SM) gray-brown, medium dense, wet, fine sand						
46											
47											
48	S&H		11						11.1		
49											
50											
51											
52				SP-SM	medium dense to dense						
53	SPT		30								
54											
55											
56											
57					dense						
58	SPT		—								
59											
60											

Treadwell&Rollo

Project No.: 3868.01

Figure: A-1b

TEST GEOTECH LOG 386801.GPJ TR.GDT 7/14/04

PROJECT: **SUTTER'S LANDING PARK**
Sacramento, California

Log of Boring TR-1

DEPTH (feet)	SAMPLES: Sampler Type	SAMPLES: Sample	SAMPLES: SPT N-Value[1]	LITHOLOGY	MATERIAL DESCRIPTION	LABORATORY TEST DATA: Type of Strength Test	Confining Pressure Lbs/Sq Ft	Shear Strength Lbs/Sq Ft	Fines %	Natural Moisture Content, %	Dry Density Lbs/Cu Ft
					SAND with SILT (SP-SM) (continued)						
61				SP-SM							
62					very dense						
63	SPT		53								
64											
65											
66											
67											
68											
69											
70											
71											
72											
73											
74											
75											
76											
77											
78											
79											
80											
81											
82											
83											
84											
85											
86											
87											
88											
89											
90											

Boring terminated at a depth of 63.5 feet.
Boring backfilled with neat cement grout.
Groundwater encountered at 32 feet during drilling.

[1] S&H blow counts converted to SPT N-value with a factor of 0.7.
[2] Elevation based on NGVD 1929.

Treadwell&Rollo

Project No.: 3868.01
Figure: A-1c

PROJECT:	SUTTER'S LANDING PARK Sacramento, California	**Log of Boring TR-2**	PAGE 1 OF 2

Boring location:	See Site Plan, Figure 2		Logged by: E. Banaag
Date started:	3/1/04	Date finished: 3/1/04	
Drilling method:	Hollow-stem auger		
Hammer weight/drop:	140 lbs./30 inches	Hammer type: Automatic	LABORATORY TEST DATA
Sampler:	Sprague & Henwood (S&H), Standard Penetration Test (SPT)		

DEPTH (feet)	SAMPLES: Sampler Type	SAMPLES: Sample	SAMPLES: SPT N-Value[1]	LITHOLOGY	MATERIAL DESCRIPTION Ground Surface Elevation: 45 feet[2]	Type of Strength Test	Confining Pressure Lbs/Sq Ft	Shear Strength Lbs/Sq Ft	Fines %	Natural Moisture Content, %	Dry Density Lbs/Cu Ft
1					Four-inch-thick asphalt-concrete Aggregate base						
2–3	S&H		18	SM	SILTY SAND (SM) black, medium dense, moist PID = 0 ppm FILL					22.4	93
4–6	S&H		6		LANDFILL DEBRIS soil (90%), brick and glass (10%) LANDFILL DEBRIS						
7–9	S&H		5		methane concentration = 32% LEL, pause drilling PID = 0 ppm soil (95%), glass (5%)						
10–11	S&H		2								
12–13	S&H		6		PID = 0 ppm methane concentration = 44% LEL, pause drilling soil (90%), glass (10%)						
14–16	S&H		13		soil (95%), brick (5%) trace of wood						
17–18	S&H		6	SM	SILTY SAND (SM) brown, loose, wet, fine sand				23.0		
19–21	S&H		8		PID = 0 methane concentration = 7% LEL						
22–24					SAND (SP) gray-brown, loose, wet, fine to medium sand, trace of silt						
25–26	S&H		8	SP	PID = 0 methane concentration = 6% LEL				4.1		
27–29				SP	SAND (SP) light brown, loose, wet, trace of silt						
30											

Treadwell&Rollo

Project No.:	Figure:
3868.01	A-2a

PROJECT: **SUTTER'S LANDING PARK**
Sacramento, California

Log of Boring TR-2

DEPTH (feet)	SAMPLES: Sampler Type	SAMPLES: Sample	SAMPLES: SPT N-Value[1]	LITHOLOGY	MATERIAL DESCRIPTION	LABORATORY TEST DATA: Type of Strength Test	Confining Pressure Lbs/Sq Ft	Shear Strength Lbs/Sq Ft	Fines %	Natural Moisture Content, %	Dry Density Lbs/Cu Ft
31	S&H		8	SP	SAND (SP) (continued)						
32											
33					▽ (3/1/04)						
34											
35											
36	S&H		8								
37											
38				SP-SM	SAND with SILT (SP-SM) gray, medium dense, wet, fine to medium sand						
39											
40											
41	SPT		12								
42											
43											
44					PID = 0 methane concentration = 4% LEL						
45											
46	SPT		15								
47											
48				SM	SILTY SAND (SM) light brown, medium dense, wet, fine sand						
49											
50											
51	SPT		23								
52											
53											
54											
55											
56											
57											
58											
59											
60											

Boring terminated at a depth of 51.5 feet.
Boring backfilled with neat cement grout.
Groundwater encountered at 33 feet during drilling.

[1] S&H blow counts converted to SPT N-value with a factor of 0.7.
[2] Elevation based on NGVD 1929.

Treadwell&Rollo

Project No.: 3868.01
Figure: A-2b

PROJECT: **SUTTER'S LANDING PARK**
Sacramento, California

Log of Boring TR-3

Boring location: See Site Plan, Figure 2
Logged by: E. Banaag
Date started: 3/2/04 | Date finished: 3/2/04
Drilling method: Hollow-stem auger
Hammer weight/drop: 140 lbs./30 inches | Hammer type: Automatic
Sampler: Sprague & Henwood (S&H), Standard Penetration Test (SPT)

Ground Surface Elevation: 45.5 feet[2]

DEPTH (feet)	SAMPLES: Sampler Type	SAMPLES: Sample	SAMPLES: SPT N-Value[1]	LITHOLOGY	MATERIAL DESCRIPTION	LABORATORY TEST DATA: Type of Strength Test	Confining Pressure Lbs/Sq Ft	Shear Strength Lbs/Sq Ft	Fines %	Natural Moisture Content, %	Dry Density Lbs/Cu Ft
					Six-inch-thick asphalt-concrete						
1					Aggregate base						
2											
3	S&H		18	CL	CLAY with SAND (CL) dark brown, stiff, moist Permeability Test, 3E-07 cm/sec, see Appendix C					20.2	105
4											
5											
6	S&H		8		LANDFILL DEBRIS soil (90%), wood (5%), glass (5%)						
7											
8	S&H		6		soil (80%), wood (10%), glass (10%)						
9											
10											
11	S&H		6		soil (90%), glass (10%)						
12											
13											
14											
15					methane concentration >10% LEL, pause drilling soil (90%), glass (10%)						
16	S&H		4		rotten egg odor						
17											
18											
19											
20					soil (90%), wood (10%)						
21	S&H		13								
22											
23											
24											
25					methane concentration <10% LEL						
26	S&H		13	SP	SAND (SP) gray, medium dense, moist, fine sand						
27											
28											
29											
30											

FILL

LANDFILL DEBRIS

Treadwell&Rollo

Project No.: 3868.01 | Figure: A-3a

PROJECT: **SUTTER'S LANDING PARK**
Sacramento, California

Log of Boring TR-3

DEPTH (feet)	SAMPLES: Sampler Type	SAMPLES: Sample	SAMPLES: SPT N-Value[1]	LITHOLOGY	MATERIAL DESCRIPTION	LABORATORY TEST DATA: Type of Strength Test	Confining Pressure Lbs/Sq Ft	Shear Strength Lbs/Sq Ft	Fines %	Natural Moisture Content, %	Dry Density Lbs/Cu Ft
31	S&H		12								
32				SP							
33											
34											
35					∇ (3/2/04) SILTY SAND (SM) gray, loose, wet, fine sand						
36	S&H		4								
37	SPT		7	SM							
38											
39					SAND with SILT (SP-SM) gray, medium dense, wet, medium sand methane concentration <10% LEL						
40											
41	SPT		10								
42											
43											
44											
45				SP-SM							
46	SPT		18								
47											
48											
49											
50											
51	SPT		26								
52											
53											
54											
55											
56											
57											
58											
59											
60											

Boring terminated at a depth of 51 feet.
Boring backfilled with neat cement grout.
Groundwater encountered at 35 feet during drilling.

[1] S&H blow counts converted to SPT N-value with a factor of 0.7.
[2] Elevation based on NGVD 1929.

Treadwell&Rollo

Project No.: 3868.01
Figure: A-3b

TEST GEOTECH LOG 386801.GPJ TR.GDT 7/14/04

PROJECT: **SUTTER'S LANDING PARK**
Sacramento, California

Log of Boring TR-4

DEPTH (feet)	SAMPLES: Sampler Type	SAMPLES: Sample	SAMPLES: SPT N-Value[1]	LITHOLOGY	MATERIAL DESCRIPTION	LABORATORY TEST DATA: Type of Strength Test	Confining Pressure Lbs/Sq Ft	Shear Strength Lbs/Sq Ft	Fines %	Natural Moisture Content, %	Dry Density Lbs/Cu Ft
31	S&H		27		LANDFILL DEBRIS (continued) soil (50%), paper (20%), glass (20%), wood (10%), wet LANDFILL DEBRIS						
32											
33											
34											
35					soil (70%), wood (20%), paper (5%), glass (5%), wet						
36	S&H		36								
37					SAND with SILT (SP-SM) gray, dense, wet, medium sand						
38											
39				SP-SM							
40					▽ (3/2/04) medium dense						
41	S&H		14								
42	SPT		28		SILTY SAND (SM) gray, medium dense, wet, fine to medium sand						
43					PID = 0 ppm methane concentration = 2% LEL at breathing space						
44											
45				SM							
46	S&H		25								
47											
48					SAND with SILT (SP-SM) gray, medium dense, wet, medium sand						
49											
50											
51	S&H		21								
52				SP-SM							
53											
54											
55											
56	SPT		28								
57											
58											
59											
60											

Boring terminated at a depth of 56.5 feet.
Boring backfilled with neat cement grout.
Groundwater encountered at 40 feet during drilling.

[1] S&H blow counts converted to SPT N-value with a factor of 0.7.
[2] Elevation based on NGVD 1929.

Treadwell&Rollo

Project No.: 3868.01
Figure: A-4b

PROJECT: **SUTTER'S LANDING PARK**
Sacramento, California

Log of Boring TR-4

Boring location: See Site Plan, Figure 2
Logged by: R. Nelson
Date started: 3/2/04 | Date finished: 3/2/04
Drilling method: Hollow-stem auger
Hammer weight/drop: 140 lbs./30 inches | Hammer type: Automatic
Sampler: Sprague & Henwood (S&H), Standard Penetration Test (SPT)

Ground Surface Elevation: 43.5 feet[2]

DEPTH (feet)	SAMPLES: Sampler Type	SAMPLES: Sample	SAMPLES: SPT N-Value[1]	LITHOLOGY	MATERIAL DESCRIPTION	LABORATORY TEST DATA: Type of Strength Test	Confining Pressure Lbs/Sq Ft	Shear Strength Lbs/Sq Ft	Fines %	Natural Moisture Content, %	Dry Density Lbs/Cu Ft
					Four-inch-thick asphalt-concrete						
					Six-inch-thick aggregate base						
1–2				GP	GRAVEL (GP) gray, loose, wet, fine gravel						
3	S&H		8							21.5	104
4				CL	SANDY CLAY (CL) red-brown, medium stiff, wet Atterberg Limits Test, LL = 23, PI = 4, see Appendix C						
5				GP	Permeability Test, 6E-07 cm/sec, see Appendix C FILL						
6	S&H		8		GRAVEL (GP)						
7				ML	SANDY SILT (ML) gray-brown, stiff, wet, fine sand						
8	S&H		9		Atterberg Limits Test, LL = 25, PI = non-plastic, see Appendix C					31.3	92
9					Permeability Test, 4E-06 cm/sec, see Appendix C						
10					LANDFILL DEBRIS						
11	S&H		23		soil (50%), glass (30%), paper (10%), wood (10%), wet						
12–13					PID = 0 methane concentration = 1% LEL at breathing space						
14–15											
16	S&H		16		soil (60%), wood (30%), glass (10%), trace of plastic, wet						
17–18											
19–20					LANDFILL DEBRIS						
21	S&H		21		soil (40%), wood (25%), plastic (25%), paper (5%), metal (5%), wet						
22–23					PID = 0 ppm methane concentration = 2% LEL at breathing space						
24–25											
26	S&H		12		soil (40%), paper (20%), glass (20%), wood (20%), wet						
27–30											

Treadwell&Rollo

Project No.: 3868.01 | Figure: A-4a

PROJECT: **SUTTER'S LANDING PARK**
Sacramento, California

Log of Boring TR-5

Boring location: See Site Plan, Figure 2
Logged by: R. Nelson
Date started: 3/3/04 | Date finished: 3/3/04
Drilling method: Hollow-stem auger
Hammer weight/drop: 140 lbs./30 inches | Hammer type: Automatic
Sampler: Sprague & Henwood (S&H), Standard Penetration Test (SPT)

LABORATORY TEST DATA

DEPTH (feet)	SAMPLES: Sampler Type	SAMPLES: Sample	SAMPLES: SPT N-Value[1]	LITHOLOGY	MATERIAL DESCRIPTION (Ground Surface Elevation: 48 feet[2])	Type of Strength Test	Confining Pressure Lbs/Sq Ft	Shear Strength Lbs/Sq Ft	Fines %	Natural Moisture Content, %	Dry Density Lbs/Cu Ft
					Four-inch-thick asphalt-concrete						
					Six-inch-thick aggregate base						
1–2				GC	CLAYEY GRAVEL (GC) — FILL						
3	S&H	■	18	CL	CLAY (CL) brown, very stiff, moist						
4					LANDFILL DEBRIS						
5–6	S&H	■	16		soil (60%), plastic (25%), wood (15%), trace of glass						
7–8	S&H	■	19		soil (80%), wood (10%), metal (10%)						
9–10	S&H	■	35		soil (90%), wood (5%), concrete (5%)						
11–12					methane concentration = 3% LEL at borehole PID = 0 ppm sweet-citrus odor from landfill debris						
13–15	S&H	■	15		soil (70%), wood (15%), brick (10%), plastic (5%)						
16–20					LANDFILL DEBRIS						
21	S&H	■	35		soil (90%), wood (5%), metal (5%)						
22–25											
26	S&H	■	30		soil (60%), wood (35%) plastic (5%)						
27–30											

Treadwell&Rollo

Project No.: 3868.01 | Figure: A-5a

PROJECT: **SUTTER'S LANDING PARK**
Sacramento, California

Log of Boring TR-5

DEPTH (feet)	SAMPLES: Sampler Type	Sample	SPT N-Value[1]	LITHOLOGY	MATERIAL DESCRIPTION	LABORATORY TEST DATA: Type of Strength Test	Confining Pressure Lbs/Sq Ft	Shear Strength Lbs/Sq Ft	Fines %	Natural Moisture Content, %	Dry Density Lbs/Cu Ft
31	S&H		14		soil (50%), wood (30%), paper (10%), plastic (10%) — LANDFILL DEBRIS						
32											
33											
34											
35					soil (60%), wood (30%), concrete (5%), paper (5%)						
36	S&H		24		SAND (SP) gray, medium dense, moist, fine sand						
37											
38	SPT		18								
39				SP							
40					fine to medium sand						
41	S&H		12								
42											
43					(3/3/04)						
44					SILTY SAND (SM) gray, medium dense, wet, fine to medium sand						
45											
46	S&H		8								
47	SPT		16								
48					methane concentration = 0% LEL in borehole PID = 0 ppm						
49											
50											
51	S&H		20	SM					12.5		
52	SPT		34		dense						
53											
54											
55					medium dense						
56	SPT		25								
57											
58											
59											
60											

Treadwell&Rollo

Project No.: 3868.01 | Figure: A-5b

PROJECT: **SUTTER'S LANDING PARK**
Sacramento, California

Log of Boring TR-5

DEPTH (feet)	SAMPLES: Sampler Type	SAMPLES: Sample	SAMPLES: SPT N-Value[1]	LITHOLOGY	MATERIAL DESCRIPTION	LABORATORY TEST DATA: Type of Strength Test	Confining Pressure Lbs/Sq Ft	Shear Strength Lbs/Sq Ft	Fines %	Natural Moisture Content, %	Dry Density Lbs/Cu Ft
61	SPT		35	SM	SILTY SAND (SM) (continued) dense						
62											
63											
64											
65											
66											
67											
68											
69											
70											
71											
72											
73											
74											
75											
76											
77											
78											
79											
80											
81											
82											
83											
84											
85											
86											
87											
88											
89											
90											

Boring terminated at a depth of 61.5 feet.
Boring backfilled with neat cement grout.
Groundwater encountered at 43.3 feet during drilling.

[1] S&H blow counts converted to SPT N-value with a factor of 0.7.
[2] Elevation based on NGVD 1929.

Treadwell&Rollo

Project No.: 3868.01
Figure: A-5c

PROJECT: **SUTTER'S LANDING PARK**
Sacramento, California

Log of Boring TR-6

Boring location: See Site Plan, Figure 2
Logged by: E. Banaag
Date started: 3/3/04 | Date finished: 3/3/04
Drilling method: Hollow-stem auger
Hammer weight/drop: 140 lbs./30 inches | Hammer type: Automatic
Sampler: Sprague & Henwood (S&H), Standard Penetration Test (SPT)

Ground Surface Elevation: 51 feet[2]

DEPTH (feet)	SAMPLES: Sampler Type	SAMPLES: Sample	SAMPLES: SPT N-Value[1]	LITHOLOGY	MATERIAL DESCRIPTION	LABORATORY TEST DATA: Type of Strength Test	Confining Pressure Lbs/Sq Ft	Shear Strength Lbs/Sq Ft	Fines %	Natural Moisture Content, %	Dry Density Lbs/Cu Ft
					Two-inch-thick asphalt-concrete						
1					12-inch-thick aggregate base						
2–3	S&H		22	SC	CLAYEY SAND with GRAVEL (SC) dark gray, medium dense, moist Permeability Test, 1E-05 cm/sec, see Appendix C					11.5	114
4–6	S&H		15	SC	some asphalt concrete and wood chips methane concentration <10% LEL						
7–8	S&H		45	SC	∇ (3/3/04) gravel and concrete gray, wet						
9–11	S&H		22	GP	GRAVEL with CLAY and SAND (GP) brown, medium dense, wet					18.4	113
12–13	S&H		6	CL	SANDY CLAY with GRAVEL (CL) brown, medium stiff, wet					21.1	108
14–16	S&H		4	CL	methane concentration <10% LEL						
17				SC	CLAYEY SAND (SC) gray, medium dense, wet						
18–19	S&H		11		LANDFILL DEBRIS soil (50%), paper (25%), plastic (25%), wet						
20–21	S&H		10		PID = 0 ppm methane concentration <10% LEL soil (50%), paper (25%), glass (15%), plastic (10%), wet						
22–24											
25–26	S&H		53/9"		paper (50%), soil (25%), glass (25%), wet						
27–30											

FILL

LANDFILL DEBRIS

Treadwell&Rollo

Project No.: 3868.01 | Figure: A-6a

PROJECT: **SUTTER'S LANDING PARK**
Sacramento, California

Log of Boring TR-6

DEPTH (feet)	SAMPLES: Sampler Type	SAMPLES: Sample	SAMPLES: SPT N-Value[1]	LITHOLOGY	MATERIAL DESCRIPTION	LABORATORY TEST DATA: Type of Strength Test	Confining Pressure Lbs/Sq Ft	Shear Strength Lbs/Sq Ft	Fines %	Natural Moisture Content, %	Dry Density Lbs/Cu Ft
31	S&H		18		LANDFILL DEBRIS (continued) wet						
32											
33											
34											
35					soil (25%), wood (25%), plastic (25%), glass (25%), wet						
36	S&H		20								
37											
38											
39											
40					soil (50%), paper (25%), glass (25%)						
41	S&H		20								
42					SILTY SAND (SM) gray, medium dense, wet, fine to medium sand						
43											
44											
45											
46	S&H		20								
47											
48											
49				SM							
50											
51	SPT		12								
52											
53											
54											
55											
56	SPT		22								
57											
58											
59											
60											

LANDFILL DEBRIS

Boring terminated at a depth of 56.5 feet.
Boring backfilled with neat cement grout.
Groundwater encountered at 7.5 feet during drilling.

[1] S&H blow counts converted to SPT N-value with a factor of 0.7.
[2] Elevation based on NGVD 1929.

Treadwell&Rollo

Project No.: 3868.01
Figure: A-6b

PROJECT: **SUTTER'S LANDING PARK**
Sacramento, California

Log of Boring TR-7

Boring location: See Site Plan, Figure 2
Logged by: E. Banaag
Date started: 3/5/04 | Date finished: 3/5/04
Drilling method: Hollow-stem auger
Hammer weight/drop: 140 lbs./30 inches | Hammer type: Automatic
Sampler: Sprague & Henwood (S&H), Standard Penetration Test (SPT)

Ground Surface Elevation: 47 feet[2]

DEPTH (feet)	SAMPLES: Sampler Type	SAMPLES: Sample	SAMPLES: SPT N-Value[1]	LITHOLOGY	MATERIAL DESCRIPTION	LABORATORY TEST DATA: Type of Strength Test	Confining Pressure Lbs/Sq Ft	Shear Strength Lbs/Sq Ft	Fines %	Natural Moisture Content, %	Dry Density Lbs/Cu Ft
					Four-inch-thick asphalt-concrete						
1					12-inch-thick aggregate base						
2				CL	SANDY CLAY (CL) gray-green, stiff, moist (FILL)						
3	S&H		12								
4					LANDFILL DEBRIS paper (75%), wood (25%)						
5					soil (50%), paper (30%), glass (20%)						
6	S&H		11								
7					methane concentration <10% LEL						
8	S&H		13		soil (90%), plastic (10%)						
9											
10					soil (60%), paper (20%), glass (20%)						
11	S&H		9								
12											
13											
14											
15					methane concentration <10% LEL						
16	S&H		6		soil (50%), decomposed material (20%), paper (20%), glass (10%)						
17											
18											
19											
20					soil (50%), decomposed material (25%), paper (15%), glass (10%)						
21	S&H		12								
22											
23											
24					PID = 0.1 ppm						
25					methane concentration <10% LEL						
26	S&H		13		soil (50%), paper (40%), wood (10%)						
27											
28											
29					methane concentration <10% LEL						
30											

LANDFILL DEBRIS

Treadwell&Rollo

Project No.: 3868.01 | Figure: A-7a

PROJECT: **SUTTER'S LANDING PARK**
Sacramento, California

Log of Boring TR-7

DEPTH (feet)	SAMPLES: Sampler Type	SAMPLES: Sample	SAMPLES: SPT N-Value[1]	LITHOLOGY	MATERIAL DESCRIPTION	LABORATORY TEST DATA: Type of Strength Test	Confining Pressure Lbs/Sq Ft	Shear Strength Lbs/Sq Ft	Fines %	Natural Moisture Content, %	Dry Density Lbs/Cu Ft
					soil (50%), paper (25%), wood (25%)						
31	S&H		13	SP	SAND (SP) gray, medium dense, moist, fine sand						
32											
33					CLAYEY SAND (SC) gray, medium dense, moist, fine sand						
34											
35				SC							
36	S&H		13						15.1		
37											
38					SAND (SP) gray, loose, wet, medium sand (3/5/04)						
39											
40											
41	SPT		8	SP							
42											
43											
44											
45											
46	SPT		8	ML	SILT (ML) gray, medium stiff, wet Atterberg Limits Test, LL = 31, PI = non-plastic, see Appendix C						
47											
48					SILTY SAND (SM) gray, medium dense, wet						
49											
50											
51	SPT		15	SM					34.6		
52											
53											
54											
55											
56	SPT		27								
57											
58											
59											
60											

Boring terminated at a depth of 56.5 feet.
Boring backfilled with neat cement grout.
Groundwater encountered at 39 feet during drilling.

[1] S&H blow counts converted to SPT N-value with a factor of 0.7.
[2] Elevation based on NGVD 1929.

Treadwell&Rollo

Project No.: 3868.01
Figure: A-7b

PROJECT: **SUTTER'S LANDING PARK**
Sacramento, California

Log of Boring TR-8

Boring location: See Site Plan, Figure 2
Logged by: E. Banaag
Date started: 3/4/04 | Date finished: 3/4/04
Drilling method: Hollow-stem auger
Hammer weight/drop: 140 lbs./30 inches | Hammer type: Automatic
Sampler: Sprague & Henwood (S&H), Standard Penetration Test (SPT)

Ground Surface Elevation: 45 feet[2]

DEPTH (feet)	SAMPLES: Sampler Type	SAMPLES: Sample	SAMPLES: SPT N-Value[1]	LITHOLOGY	MATERIAL DESCRIPTION	LABORATORY TEST DATA: Type of Strength Test	Confining Pressure Lbs/Sq Ft	Shear Strength Lbs/Sq Ft	Fines %	Natural Moisture Content, %	Dry Density Lbs/Cu Ft
1–4	S&H		20	CL	SANDY CLAY with GRAVEL (CL) tan, very stiff, moist Atterberg Limits Test, LL = 41, PI = 18, see Appendix C Permeability Test, 4E-08 cm/sec, see Appendix C					18.4	105
5–6	S&H		49	GP	GRAVEL with SAND (GP) gray, dense, moist						
7				CL	SILTY CLAY with GRAVEL (CL)						
8–9	S&H		11	GP	GRAVEL with SAND (GP) gray, medium dense, moist, with asphalt FILL						
10–11	S&H		35/6"	SC	CLAYEY SAND with GRAVEL (SC) dark gray, very dense, moist CONCRETE RUBBLE						
12–13	S&H		16	CL-ML	SILTY CLAY (CL-ML) mottled dark gray and black, very stiff, moist Atterberg Limits Test, LL = 25, PI = 4, see Appendix C						
14–16	S&H		18	SP	SAND with GRAVEL (SP) gray, medium dense, moist, with brick and asphalt fragments						
17–18	S&H		8		LANDFILL DEBRIS PID = 0 ppm methane concentration <10% LEL soil (50%), glass (25%), paper (25%)						
19–21	S&H		7		PID = 0 ppm methane concentration <10% LEL decomposed material (50%), soil (25%), fabric (25%), wet						
22–26	S&H		8		PID = 0.1 ppm methane concentration <10% LEL soil (50%), decomposed material (25%), glass (15%), wood (10%) LANDFILL DEBRIS						
27–30					PID = 0.1 ppm						

Treadwell&Rollo

Project No.: 3868.01 | Figure: A-8a

PROJECT: **SUTTER'S LANDING PARK**
Sacramento, California

Log of Boring TR-8

DEPTH (feet)	SAMPLES: Sampler Type	SAMPLES: Sample	SAMPLES: SPT N-Value[1]	LITHOLOGY	MATERIAL DESCRIPTION	LABORATORY TEST DATA: Type of Strength Test	Confining Pressure Lbs/Sq Ft	Shear Strength Lbs/Sq Ft	Fines %	Natural Moisture Content, %	Dry Density Lbs/Cu Ft
					methane concentration <10% LEL						
31	S&H		11	SP	SAND (SP) gray, medium dense, moist						
32											
33											
34				ML	SANDY SILT (ML) gray-brown, medium stiff, wet, fine sand						
35											
36	S&H		5		Atterberg Limits Test, LL = 29, PI = non-plastic, see Appendix C				69.0		
37											
38											
39											
40					▽ (3/4/04)						
41	S&H		4								
42				SM	SILTY SAND (SM) gray, medium dense, wet, fine sand						
43											
44											
45											
46	SPT		22						26.9		
47											
48											
49											
50											
51	SPT		27								
52											
53											
54											
55											
56	SPT		11								
57											
58											
59											
60											

Boring terminated at a depth of 56.5 feet.
Boring backfilled with neat cement grout.
Groundwater encountered at 40 feet during drilling.

[1] S&H blow counts converted to SPT N-value with a factor of 0.7.
[2] Elevation based on NGVD 1929.

Treadwell&Rollo

Project No.: 3868.01
Figure: A-8b

ALTERNATE GROUND MOUNT DRAWINGS

GENERAL NOTES

1. ALL CONSTRUCTION SHALL COMPLY TO THE MINIMUM STANDARDS OF THE FOLLOWING CODES: 2010 CALIFORNIA BUILDING CODE (CBC), INCLUDING THE LATEST REVISIONS & REFERENCED STANDARDS IN CHAPTER 35 OF THE CBC & IBC.
2. ALL FRAME SYSTEMS & PHOTOVOLTAIC INSTALLATION SHALL COMPLY WITH THE CONERGY INSTALLATION GUIDELINES AND MANUAL PROVIDED BY THE OWNER OR CONERGY.
3. CONSTRUCTION METHODS & PROJECT SAFETY: THE CONSTRUCTION DOCUMENTS REPRESENT THE FINISHED STRUCTURE & INDIVIDUAL PIECE NUMBERS REQUIRED FOR THE STRUCTURE. THIS DOES NOT INCLUDE THE METHODS, PROCEDURES OR SEQUENCE OF CONSTRUCTION UNLESS OTHERWISE IDENTIFIED IN THE CONERGY USER INSTALLATION MANUAL. NEITHER THE PROJECT OWNER NOR CONERGY WILL ENFORCE THE SAFETY MEASURES, REGULATIONS, OR BE HELD RESPONSIBLE FOR THE SAFETY OF THE JOB SITE DURING CONSTRUCTION. IT IS THE CONTRACTOR'S RESPONSIBILITY TO COMPLY WITH ALL THE LOCAL, STATE, & FEDERAL SAFETY & HEALTH STANDARDS, LAWS & REGULATIONS.
4. DETAILS NOT SPECIFICALLY SHOWN ON THE DRAWINGS SHALL BE SIMILAR DETAILS FOR SIMILAR CONSTRUCTION SHOWN ON THESE DRAWINGS UNLESS SPECIFICALLY STATED IN THE CONERGY INSTALLATION MANUAL.
5. NO STRUCTURAL MEMBERS, RAILS, OR FRAMING MEMBERS SHALL BE CUT, NOTCHED, OR OTHERWISE PENETRATED UNLESS SPECIFICALLY APPROVED BY THE ENGINEER OF RECORD, CONERGY, OR STATED ON THE CONTRACT DRAWINGS, OR IN THE CONERGY INSTALLATION MANUAL.
6. DRAWING SCALES ARE APPROXIMATE & SHOULD NOT BE SCALED. THE CONTRACTOR SHALL REVIEW THE DIMENSIONS PRIOR TO STARTING ANY CONSTRUCTION. CONERGY SHALL BE NOTIFIED OF ANY DISCREPANCIES OR INCONSISTENCIES.
7. ALL QUESTIONS & / OR REQUESTS FOR INFORMATION (RFI) MUST COME FROM THE GENERAL CONTRACTOR & MUST BE LEGIBLE, CLEAR & CONCISE (EITHER TYPED OR CLEARLY HAND WRITTEN).

ALUMINUM NOTES

1. ALL ALUMINUM SHALL COMPLY WITH CHAPTER 20 OF THE CBC & THE ALUMINUM DESIGN MANUAL 2010 (ADM10).
2. ALL ALUMINUM MEMBERS & MISCELLANEOUS ALUMINUM SHALL CONFORM TO THE ALLOY & TEMPER DESIGNATIONS, APPROVED ALUMINUM SUPPLIERS, AND STRENGTH AS INDICATED IN THE LIST BELOW (UNLESS OTHERWISE NOTED):

ALLOY - TEMPER	APPROVED SUPPLIER	YIELD STRENGTH	(ELASTIC MODULUS)
65496 (AA 6063) - T6	ALCAN	Fy = 33 KSI	(E = 10.10×10^3 KSI)
6105 -T5	ALCOA	Fy = 35 KSI	(E = 10.10×10^3 KSI)

STRUCTURAL STEEL NOTES

1. ALL STRUCTURAL STEEL SHALL BE DETAILED & FABRICATED BY AN APPROVED & LICENSED AISC FABRICATOR IN ACCORDANCE WITH THE AISC SPECIFICATIONS (LATEST EDITION AS IDENTIFIED BY THE CBC).
2. ALL STRUCTURAL STEEL, BUILT-UP SECTIONS & MISCELLANEOUS STEEL SHALL CONFORM TO THE ASTM DESIGNATIONS (& STRENGTH) AS INDICATED IN THE LIST BELOW (UNLESS OTHERWISE NOTED):

DESCRIPTION	MINIMUM ASTM (YIELD STRENGTH)
"W " SHAPES (WIDE FLANGES) & "S" SHAPES	A36 (Fy = 36 KSI)
BUILT-UP SECTIONS	A36 (Fy = 36 KSI)
ANGLES & CHANNELS (IF APPLICABLE)	A36 (Fy = 36 KSI)
PLATES (IF APPLICABLE)	A36 (Fy = 36 KSI)
BOLTS	GRADE 18-8 OR 316 (STAINLESS STEEL)

3. THE CONTRACTOR SHALL FURNISH STRUCTURAL STEEL SHOP DRAWINGS TO THE OWNER FOR REVIEW & APPROVAL BEFORE FABRICATION. NUT & BOLT MATERIAL SHALL MATCH THE MATERIAL TYPE, GRADE, AND STRENGTH.
4. ALL BOLTS SHALL BE STAINLESS STEEL, UNLESS OTHERWISE NOTED.
5. ALL STRUCTURAL STEEL PILES SHALL BE GALVANIZED WITH A MINIMUM COATING THICKNESS OF G75 (3.0 MILS) & COMPLY WITH THE STANDARDS & REQUIREMENTS LISTED IN ASTM A123 (LATEST EDITION LISTED IN THE CURRENT BUILDING CODE) GALVANIZING CERTIFICATION SHALL BE PROVIDED TO THE PURCHASER TO ENSURE SPECIFICATIONS OF ASTM A123, SECTION 9 & 10 ARE MET.

SOILS & FOUNDATION NOTES

1. FOUNDATION SYSTEM SHALL BE DESIGNED BY A REGISTERED CIVIL OR STRUCTURAL PROFESSIONAL ENGINEER.

DESIGN LOADS:

SEISMIC DESIGN CRITERIA

ANALYSIS PROCEDURE USED:
SEISMIC DESIGN REQUIREMENTS FOR NONBUILDING STRUCTURES
BASIC SEISMIC-FORCE-RESISTING SYSTEM:
CANTILEVERED COLUMN SYSTEM TENSION ONLY BRACING
SPECTRAL RESPONSE ACCELERATION PARAMETERS:

S_S = 0.569 S_1 = 0.238
S_{MS} = 0.766 S_{M1} = 0.459
S_{DS} = 0.510 S_{D1} = 0.306

SITE CLASS = D OCCUPANCY CATEGORY = II
SEISMIC OCCUPANCY CATEGORY = D IMPORTANCE FACTOR, I_E = 1.0
THIS STRUCTURE IS CLASSIFIED AS:
NON-ESSENTIAL FOR TESTING & INSPECTION REQUIREMENTS
DESIGN BASE SHEAR COEFFICIENT, Cs = 0.38 (STRENGTH LEVEL)
RESPONSE MODIFICATION COEFFICIENTS USED,
R = 1.25 (CANTILEVERED COLUMNS)

WIND DESIGN CRITERIA:

ANALYSIS PROCEDURE USED:
ASCE 7-05 METHOD 2 - ANALYTICAL PROCEDURE
(MWFRS: MONOSLOPE
FREE ROOF, FIGURE 6-18A)
BASIC WIND SPEED, V = 85 MPH (3 SECOND GUST)
EXPOSURE = C
IMPORTANCE FACTOR, I_W = 1.0
DESIGN WIND PRESSURE, qh = 13.4 PSF

NET DESIGN WIND PRESSURE	WIND DIRECTION 0°	WIND DIRECTON 180°
PNW (CASE A)	-14.77	17.83
PNL (CASE A)	-17.04	19.65
PNW (CASE B)	-25.33	23.85
PNL (CASE B)	-2.27	7.61

NOTE: NEGATIVE SIGN IDENTIFIES UPLIFT PRESSURE

SNOW LOAD CRITERIA: N/A

EXPOSURE FACTOR, Ce = 0.90
THERMAL FACTOR, Ct = 1.20
IMPORTANCE FACTOR, Is = 1.00
ROOF SLOPE FACTOR, Cs = 0.93
GROUND SNOW LOAD, Pg = 0 PSF

STATEMENT OF SPECIAL INSPECTION & TESTING:

SPECIAL INSPECTION & TESTING SCHEDULE			
ITEM (S)	PERIODIC	CONTINUOUS	CBC CODE REFERENCE
CONCRETE			SECTION 1704.4A & TABLE 1704.4
FORMWORK INSPECTION	N/A	N/A	TABLE 1704.4A, #12
VERIFY USE OF MIX DESIGN	N/A	N/A	TABLE 1704.4A, #5
SLUMP, TEMPERATURE, STRENGTH, & AIR CONTENT TEST	N/A	N/A	TABLE 1704.4A, #6
PERIODIC INSPECTION FOR MAINTENANCE OF SPECIFIED			
CURING TEMPERATURE TECHNIQUES	N/A	N/A	TABLE 1704.4A, #8
CONTINUOUS PLACEMENT INSPECTION	N/A	N/A	1704.4A, #7
4 CYLINDERS PER 150 CY			
TEST: 1 DAY @ 7 DAYS, 2 DAYS @ 28 DAYS, 1 HOLD	N/A	N/A	
BOLTS INSTALLED IN CONCRETE			TABLE 1704.4A #3 & #4
ALL BOLTS	N/A	N/A	
SPECIFIED LOCATION OF BOLTS (OR QTY):	N/A	N/A	
REINFORCING STEEL			
MATERIALS & PLACEMENT INSPECTION	N/A	N/A	1704.4
STRUCTURAL STEEL			CHAPTER 17 (1704A, 170A, 1708.2A)
VERIFICATION OF STRUCTURAL STEEL (INCL. GALVANIZING)	N/A		1704.3A. #3
STRUCTURAL STEEL TESTING & INSPECTION	N/A		1707.2A & 1708.3A & SECTION 9 & 10 OF ASTM A123
DRIVEN DEEP FOUNDATION ELEMENTS			TABLE 1704.8A
VERIFY ELEMENT MATERIALS, SIZE, LENGTHS COMPLY		N/A	
WITH THE REQUIREMENTS		N/A	
DETERMINE CAPACITIES OF TEST ELEMENTS & CONDUCT			
ADDITIONAL LOAD TESTS, AS REQUIRED		N/A	
OBSERVE DRIVING OPERATIONS, MAINTAIN RECORDS		N/A	
VERIFY PLACEMENT LOCATIONS & PLUMBNESS		N/A	
SOIL, GRADING, EXCAVATION & BACKFILLING		N/A	
SUBGRADE & SITE PREPARATION	N/A	N/A	
INSPECTION OF ENGINEERED FILL	N/A	N/A	
VERIFY BEARING STRATA & DEPTH OF FOUNDATIONS	N/A	N/A	
SPECIAL CASES			
EXPANSION OR ADHESIVE ANCHORS INSTALLED IN			
CONCRETE: **INSTALLATION INSPECTION**	N/A	N/A	TABLE 1704.4A, #4
EXPANSION OR ADHESIVE ANCHORS INSTALLED IN			
CONCRETE: **PROOF LOAD TESTING**	N/A	N/A	TABLE 1704.4A, #4
PERIODIC INSPECTION OF ARCHITECURAL COMPONENTS	N/A	N/A	SECTION 1706.4A & 1707.6A
INSPECTION OF MECHANICAL & ELECTRICAL COMPONENTS	N/A	N/A	SECTION 1707.7A -8A & 1708.4A
WIND REQUIREMENTS: WIND RESISTANCE COMPONENTS	N/A	N/A	SECTION 1706.4A

NOTES:
1.) ALL SPECIAL INSPECTION & TESTING AGENCIES SHALL BE APPROVED PER CBC CHAPTER 17.
2.) PROVIDE SPECIAL INSPECTION REPORTS TO THE BUILDING DEPARTMENT, OWNER, ENGINEER OF RECORD, & MOUNTING SYSTEMS, INC.
3.) SEE CBC FOR THE DEFINITIONS OF "PERIODIC" & "CONTINUOUS."
4.) SEE SOILS REPORT FOR ANY INFORMATION REGARDNG SPECIAL INSPECTIONS.

mounting systems
Mounting Systems Inc.
820 Riverside Parkway
West Sacramento, CA 95605
916 287 2220

ENGINEER'S SEAL/STAMP

SUTTER LANDING PARK
SACRAMENTO, CA
SIGMA II 2x14 & 2x7
(1640x992x40) 20°p

Copyright © 2013 Mounting Systems Inc., West Sacramento

JOB NO.: ENUS 12-052
DATE: 13.2.27
DRAWN BY: NDI
CHECKED BY:
SUBMITTED:
SUBMITTED:
SHEET: 1 of 4 11"X17" I

GENERAL NOTES

1

D:\Users\ndi\Desktop\ENUS12-052.dwg, 2/27/2013 3:10:00 PM

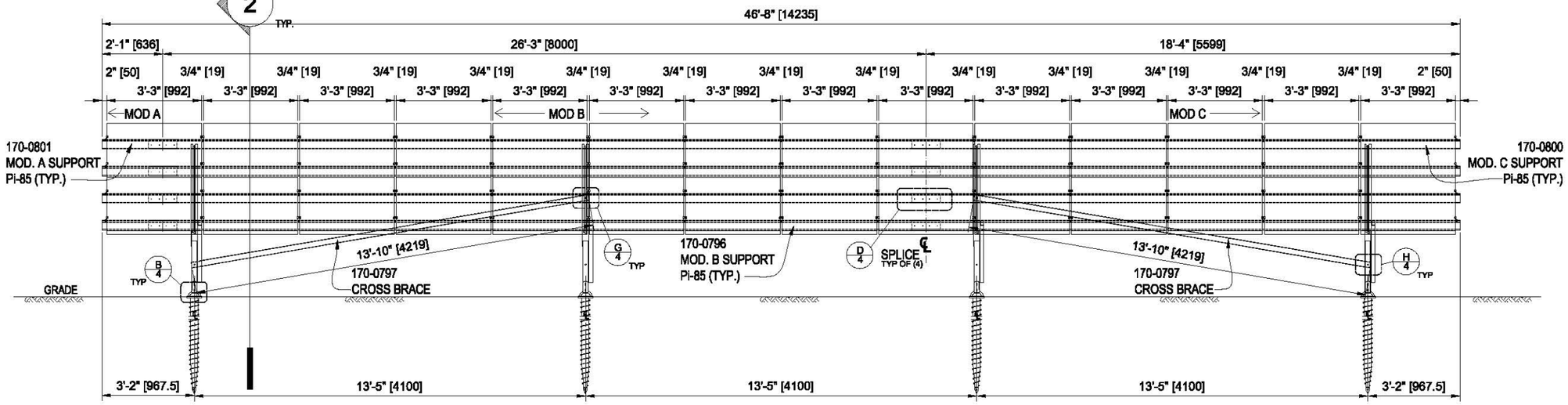

1 ELEVATION
SCALE: N.T.S.

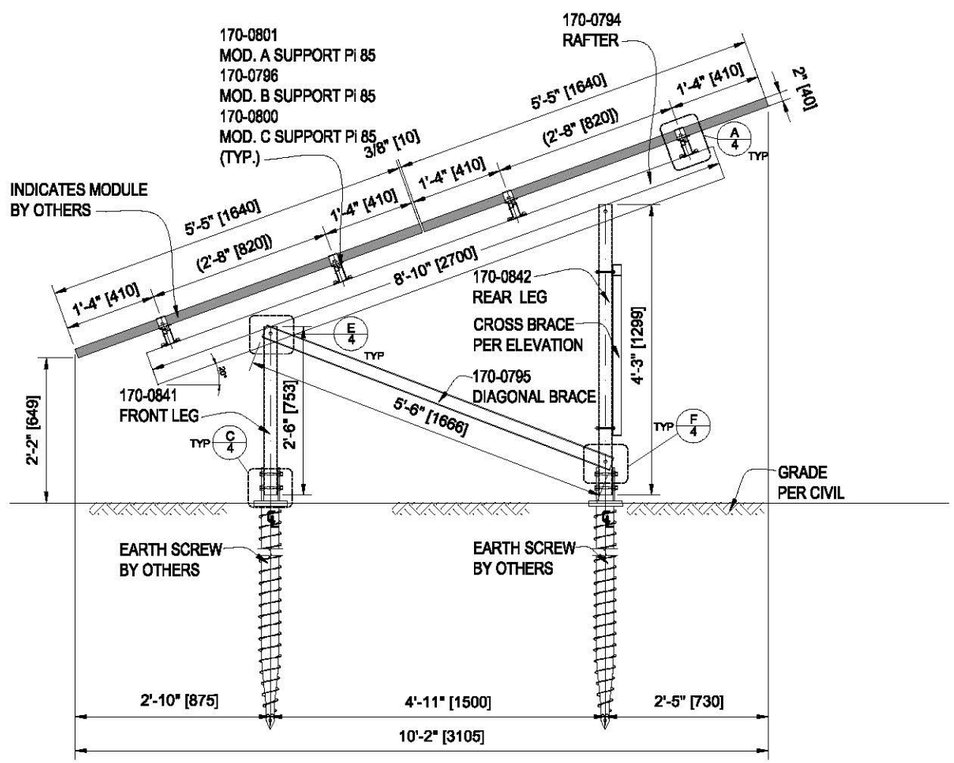

2 SECTION
SCALE: N.T.S.

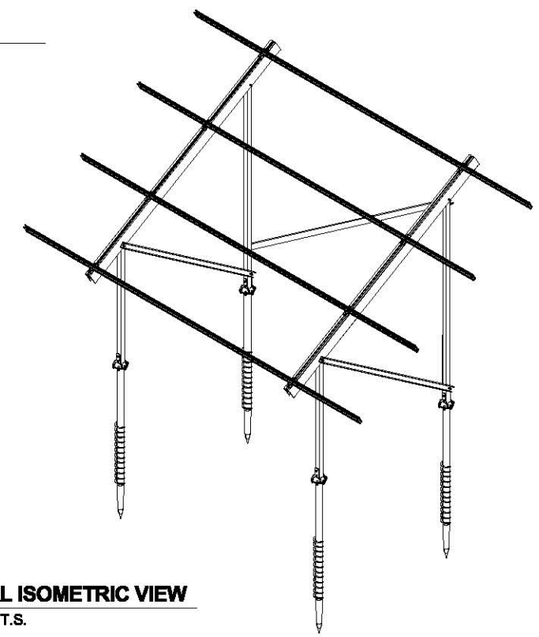

PARTIAL ISOMETRIC VIEW
SCALE: N.T.S.

NOTES:
1. ALL FRAME MEMBERS SHALL BE ALUMINUM WITH THE ALLOY/TEMPER AND STRENGTH AS INDICATED ON SHEET 1.
2. ALL DIMENSIONS ARE IN FEET-INCHES [MILLIMETERS], UNLESS OTHERWISE NOTED.

LEGEND:

MOD	INDICATES MODLINE
000-XXX	INDICATES ARTICLE NUMBER
M00x00	INDICATES BOLT SIZE.
OH	OPPOSITE HAND
TYP	TYPICAL

DETAIL DESCRIPTION BOLTED CONNECTION M12X100

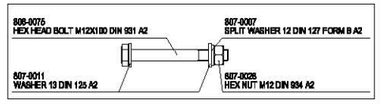

mounting systems
Mounting Systems Inc.
820 Riverside Parkway
West Sacramento, CA 95605
916 287 2220

ENGINEER'S SEAL/STAMP

SUTTER LANDING PARK
SACRAMENTO, CA
SIGMA II 2x14
(1640x992x40) 20°p

Copyright © 2013 Mounting Systems Inc., West Sacramento

JOB NO.: ENUS 12-052	
DATE: 13.2.27	
DRAWN BY: NDI	
CHECKED BY:	
SUBMITTED:	
SUBMITTED:	
SHEET: 2 of 4	11"X17" I

SECTION
ELEVATION
2

\\conergy.net\CY\cg\Components\MS\SAC\departments\Engineering\projects\2012\5_Sigma\ENUS12-052 Sutter Landing Park (1640x994x46)\Drawings\ENUS12-052 Sutter Landing Park (1640x992x40) earth screw.dwg, 4/8/2013 12:19:41 PM

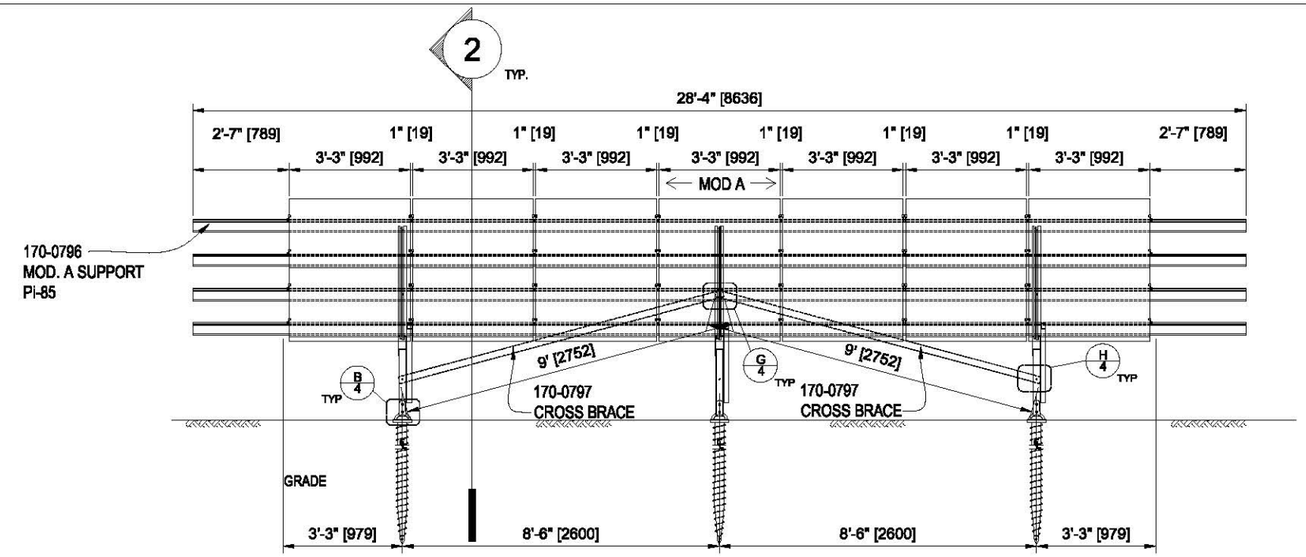

1 ELEVATION
SCALE: N.T.S.

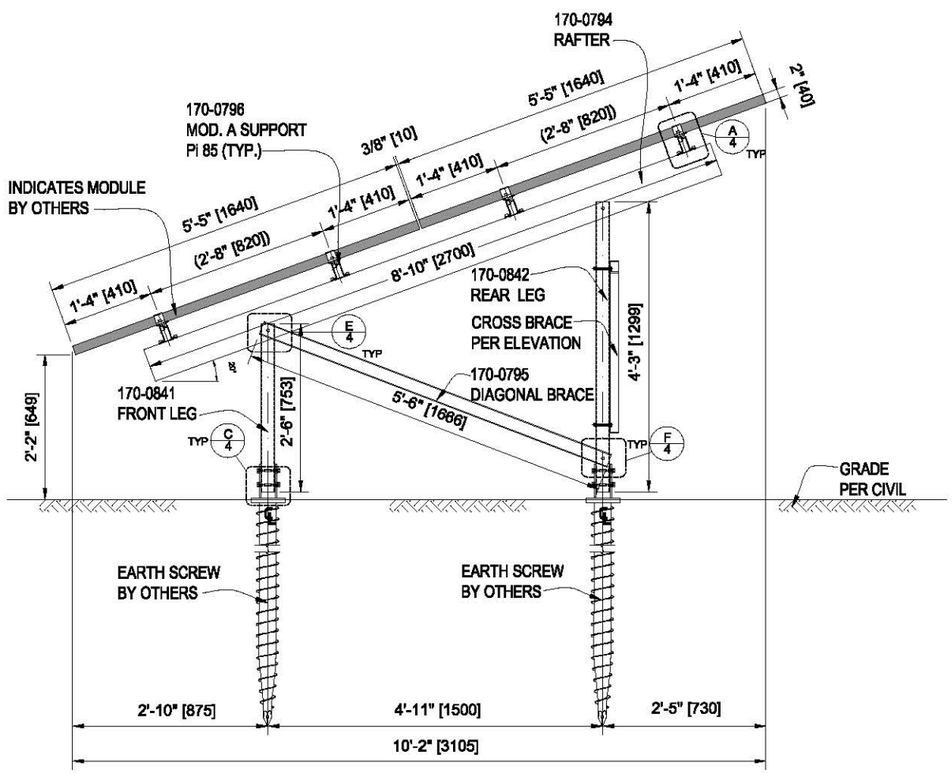

2 SECTION
SCALE: N.T.S.

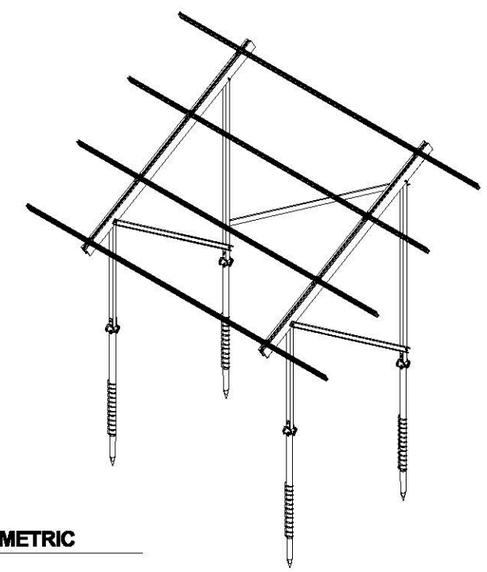

PARTIAL ISOMETRIC
SCALE: N.T.S.

NOTES:
1. ALL FRAME MEMBERS SHALL BE ALUMINUM WITH THE ALLOY/TEMPER AND STRENGTH AS INDICATED ON SHEET 1.
2. ALL DIMENSIONS ARE IN FEET-INCHES [MILLIMETERS], UNLESS OTHERWISE NOTED.

LEGEND:

MOD	INDICATES MODLINE
000-XXX	INDICATES ARTICLE NUMBER
M00x00	INDICATES BOLT SIZE.
OH	OPPOSITE HAND
TYP	TYPICAL

DETAIL DESCRIPTION BOLTED CONNECTION M12X100

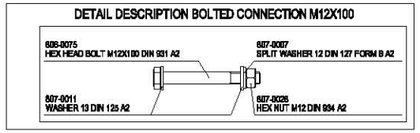

mounting systems
Mounting Systems Inc.
820 Riverside Parkway
West Sacramento, CA 95605
916 287 2220

ENGINEER'S SEAL/STAMP

SUTTER LANDING PARK
SACRAMENTO, CA
SIGMA II 2x7
(1640x992x40) 20°p

Copyright © 2013 Mounting Systems Inc., West Sacramento

JOB NO.: ENUS 12-052	
DATE: 13.2.27	
DRAWN BY: NDI	
CHECKED BY:	
SUBMITTED:	
SUBMITTED:	
SHEET: 3 of 4	11"X17" I

SECTION
ELEVATION
3

\\conergy.net\CY\cg\Components\MS\SAC\departments\Engineering\projects\2012\5_Sigma\ENUS12-052 Sutter Landing Park (1640x994x46)\Drawings\ENUS12-052 Sutter Landing Park (1640x992x40) earth screw.dwg, 4/8/2013 9:56:46 AM

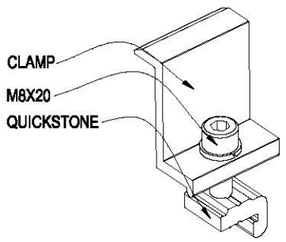

ASSEMBLY CLAMP
ISOMETRIC VIEW

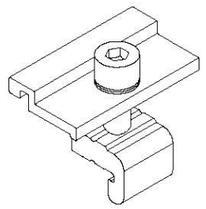

MODULE SUPPORT CLAMP
ISOMETRIC VIEW

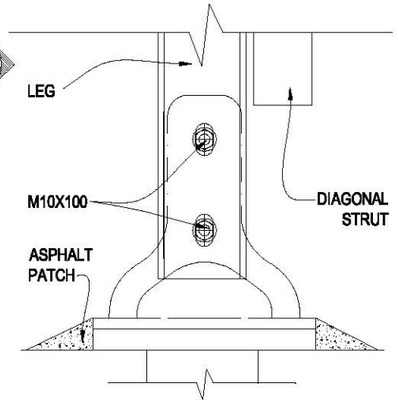

B FOOT PLATE - ELEVATION VIEW
SCALE: N.T.S.

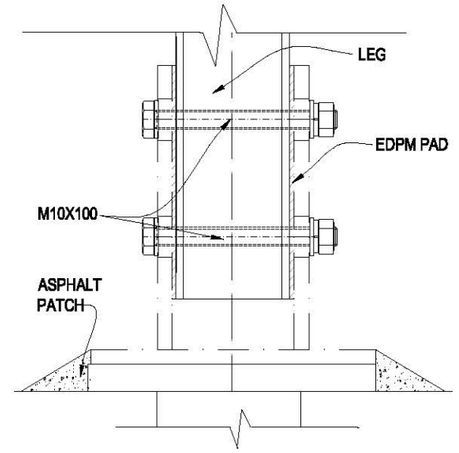

C FOOT PLATE - SECTION VIEW
SCALE: N.T.S.

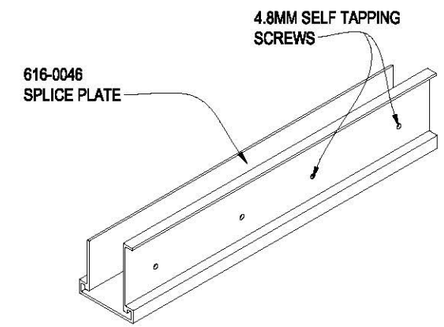

D SPLICE PLATE DETAIL
SCALE: N.T.S.

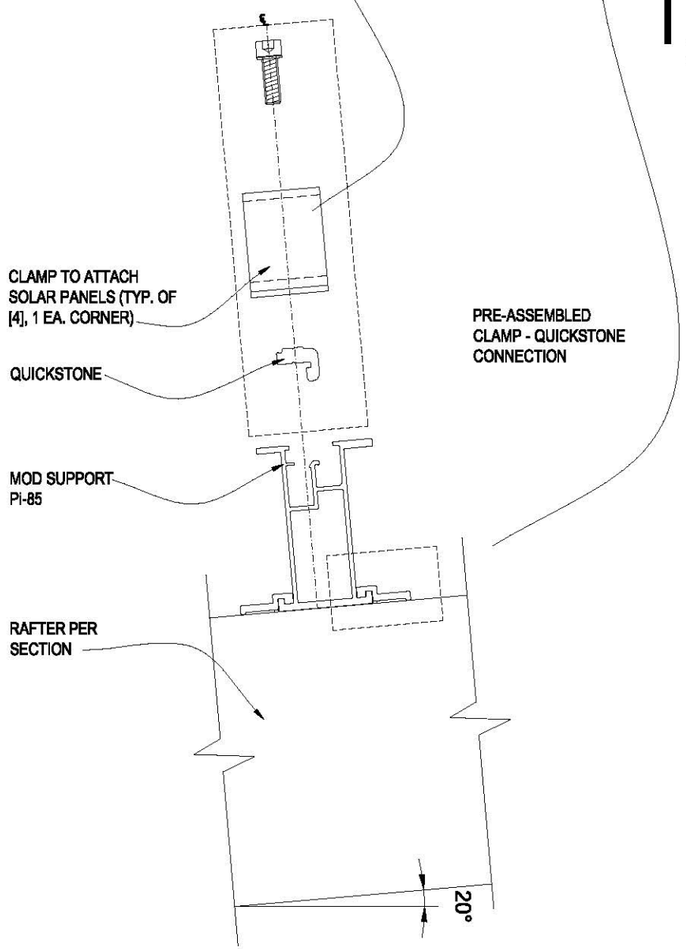

A EXPLODED RAFTER CONNECTION
SCALE: N.T.S.

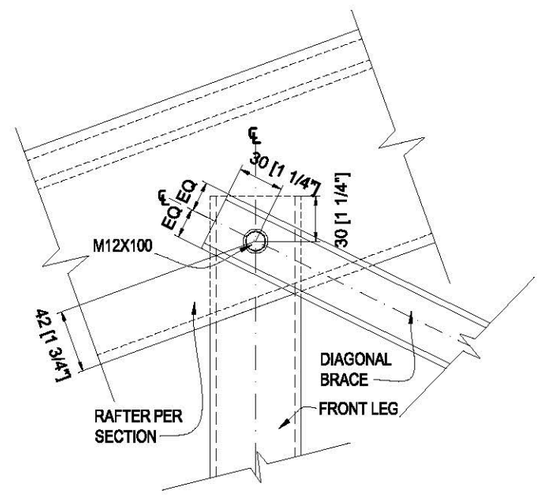

@ TOP

E CONNECTION @ DIAGONAL
SCALE: N.T.S.

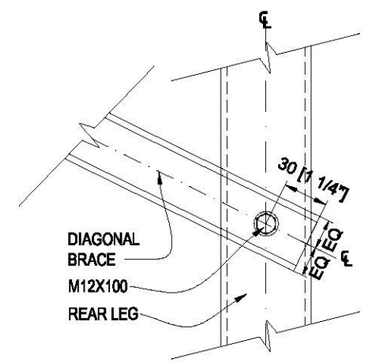

@ BOTTOM

F CONNECTION @ DIAGONAL
SCALE: N.T.S.

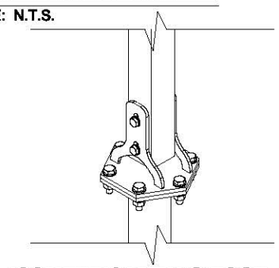

ISOMETRIC VIEW @ FOOT
SCALE: N.T.S.

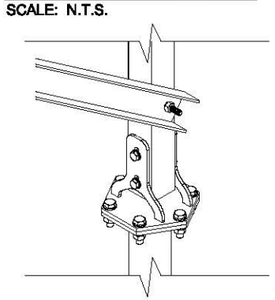

ISOMETRIC VIEW @ DIAGONAL
SCALE: N.T.S.

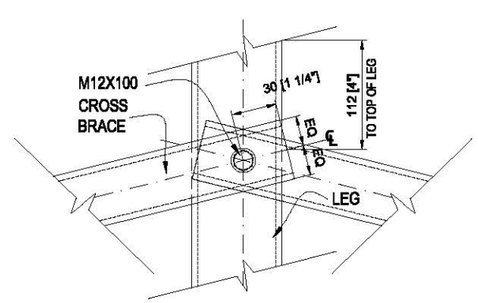

@ TOP (LOOKING FROM BACK)

G CROSS BRACE CONNECTION
SCALE: N.T.S.

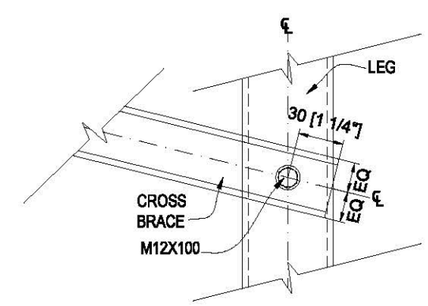

@ BOTTOM (LOOKING FROM BACK)

H CROSS BRACE CONNECTION
SCALE: N.T.S.

mounting systems
Mounting Systems Inc.
820 Riverside Parkway
West Sacramento, CA 95605
916 287 2220

ENGINEER'S SEAL/STAMP

SUTTER LANDING PARK
SACRAMENTO, CA
SIGMA II 2x14 & 2x7
(1640x992x40) 20°p

Copyright © 2013 Mounting Systems Inc., West Sacramento

JOB NO.: ENUS 12-052	
DATE: 13.2.27	
DRAWN BY: NDI	
CHECKED BY:	
SUBMITTED:	
SUBMITTED:	
SHEET: 4 of 4	11"X17" I

DETAILS

4

D:\Users\ndi\Desktop\ENUS12-052 Sutter Landing Park (1640x992x40) earth screw.dwg, 4/8/2013 12:46:37 PM

Appendix P

Countywide Services Agency
Environmental Management Department
Environmental Compliance Division
Elise Rothschild, Chief

County of Sacramento

Bradley J. Hudson, County Executive
Ann Edwards, Chief Deputy County Executive
Val F. Siebal, Department Director

December 7, 2012

Dana Allen, Associate Planner
City of Sacramento
Community Development Department
300 Richards Blvd.
Sacramento, CA 95811

Dear Ms. Allen:

SUBJECT: LEA COMMENTS ON POST CLOSURE LAND USE PLAN FOR SACRAMENTO CITY (28TH STREET) LANDFILL PHOTOVOLTAIC PROJECT – SWIS# 34-AA-0018

Background

The City of Sacramento Community Development Department, Environmental Planning Services, prepared a Notice of Preparation for a Mitigated Negative Declaration dated May 16, 2012, for a solar photovoltaic project proposed for the Sacramento City 28th Street landfill.

The Environmental Management Department, as the Local Enforcement Agency (LEA) for the California Department of Resources, Recycling and Recovery (CalRecycle), reviewed the NOP and provided comments regarding the project in a letter dated June 12, 2012.

A Post Closure Land Use Plan (PCLUP) was subsequently prepared by SCS Engineers on behalf of the City. Following agency review of the PCLUP, Environmental Planning Services organized a meeting on November 15, 2012, that included City staff, SCS Engineers, and the three agencies commenting on the plan – The LEA, CalRecycle, and the Regional Water Quality Control Board. This letter summarizes the LEA's comments and position regarding the PCLUP, as expressed in the meeting.

LEA Comments

We appreciate the opportunity to provide comments on the PCLUP in order to assist the city in assuring that future beneficial uses of this site will be conducted in a manner that keeps the site in compliance with Title 27 and protects public health. The proposed project includes three solar arrays on the west side of the landfill with no solar panel installation on Waste Management Units A and B. As expressed during the meeting, the LEA has three general concerns that should be adequately addressed in the PCLUP before this project goes forward:

1) The integrity of the landfill cover under and around the solar panels must be maintained (27CCR, section 21090).

LEA Comments, continued

2) The solar panels and related infrastructure must not impede or prevent access by landfill staff or others to do necessary landfill maintenance, monitoring, and repairs (27CCR, sections 21090 and 20750).

3) Additional site security measures should be provided, recognizing that site security has been an on-going challenge at this facility and that the proposed project may attract individuals seeking to steel copper and other metals, or other items of value (27CCR sections 20530 and 21135).

Besides these three general concerns, we provided a list of notes to the meeting attendees from the LEA's review of the PCLUP. The notes consist of a number of more specific concerns and/or requests for clarification which should also be addressed in the PCLUP. The list is provided below for the reader's convenience.

The LEA has requested that the PCLUP be revised for LEA review per clarifications and solutions proposed/discussed during the meeting to address the LEA's concerns, as well as those expressed by CalRecycle and the Regional Water Quality Control Board. Many of the proposed solutions, such as for addressing site security, will need to be further developed beyond the details discussed in the meeting.

In addition to revising the PCLUP and amending the facility's closure plan and post closure maintenance plan to address the proposed modifications now, the facility's post closure maintenance plan will need to be revised overall by July 1, 2013, per the requirements of 27CCR, section 21865. The revised plans must be submitted to the agencies for review and approval.

The LEA also concurs with CalRecycle's comments including, but not limited to the following:

- The PCLUP should specify that the city is the responsible party and will assure the site is maintained adequately and in accordance with the latest post closure maintenance plan.
- The PCLUP should specify that the site be inspected monthly by the responsible party after panel installation. After one year, the LEA will consider a reduced frequency.
- The City should ensure that CEQA is complied with.

LEA Comments, continued

LEA Notes from Review of PCLUP:

1) Once all issues are addressed, the plan should be designated as "Final".

2) The order of the appendices doesn't match the Table of Contents.

3) The Plan states that the project site APNs are 001-0170-018, 019, 021, 026, and 003-0010-001 but it appears that the project would be limited to APNs 003-0010-001, as well as 003-0050-016 and 003-0042-002 which are not included.

4) The Plan states on page 2 that the landfill operates under 1984 solid waste facility permit. Since the site does not operate and is closed, this statement should be removed.

5) According to the Plan, Arrays 1 and 2 will penetrate the cover with columns and footings. Figures and structural footing details provide more info and are also a little confusing. Dog Park and Carport array footing may penetrate cover by as much as three feet. According to the Plan, there is 3' to 18' of soil cover over waste in the Dog Park. Additional clarification is needed.

6) The Plan does not adequately address LEA concerns regarding additional security measures or potential for the project to pose an attractive nuisance. Site security is already a constant problem at this site and solar panels, cable, and equipment may attract thieves. The amended PCMP should detail additional measures to secure the site.

7) The Plan should clarify that the RP has a firm to conduct inspections and maintenance.

8) The Maintenance Plan should more fully address LEA concerns about staff access for maintenance under and around PV panels, especially where mounted on the ground. Also:

- How will issues associated with settling be corrected with panels in place?
- What measures are there to ensure that the panels don't interfere with access to monitoring systems?

9) The Maintenance Plan should specify weed/vegetation maintenance measures under and around panels on the ground in the unpaved stockpile area. Note: weed maintenance may be especially problematic if the alternative ground mount details are employed because there appears to be less space/access beneath the panels.

10) The Maintenance plan section 1.1 refers to inspection and maintenance activities detailed in subsequent sections,, but fails to specify what the subsequent sections are. Please specify for reference.

11) The Maintenance plan section 1.3 states that damage to the drainage system will be addressed immediately after it is identified but section 1.5.4 states that drainage structure repairs will be made annually, prior to the wet season. Landfill staff generally delay repairs to the landfill drainage system until the following dry season when damage is noted during the wet season. Please clarify the policy.

12) Cost estimates for cover maintenance, gas monitoring, etc. seem extremely low. Are these amounts only for the solar area? Please clarify/confirm. Also, the cost estimates should be incorporated into the PCMP.

Contact If you have any questions regarding this letter, please contact John Lewis at (916) 876-7279.

Sincerely,

John Lewis
Environmental Specialist III
Solid Waste Program

JL:gfb

c: Gino Yetka, CalRecycle/John Moody, RWQCB/Steve Harriman, City of Sacramento

W:\Data\Lewis\LEA\1 Sac City Landfill - 28th St\Solar Project\Scaled-down Project\LEA Comments on Solar Project PCLUP.doc

McCready, Ambrose

From: Lewis. John (EMD) <LewisJoh@saccounty.net>
Sent: Thursday, January 10, 2013 1:49 PM
To: dallen@cityofsacramento.org; sharriman@cityofsacramento.org; McCready, Ambrose
Cc: Todd. Lisa; Yekta, Gino (Gino.Yekta@CalRecycle.ca.gov); Moody, John@Waterboards (John.Moody@waterboards.ca.gov); Yvette Rincon (YRincon@cityofsacramento.org); TBuford@cityofsacramento.org; John Olesen
Subject: FW: 28th Street Landill: Final Post Closure Land Use Plan, Revised December 21, 2012

Ambrose, Steve, and Dana. Sorry about the delay in reviewing the revised PCLUP – I've been very busy. Aside from concurring with Gino that the closure and post closure maintenance plans should be updated now, I have the following comments on the revisions:

Site Security: Section 11 describes maintaining site security with a combination of measures, including 24 hour K9 service on-site. I think addressing the issue through a combination of measures makes sense but landfill staff indicated to me that it was their understanding that the K9 service idea had been rejected. Please confirm whether or not the city and LF operator supports this measure before including it in the final document. I would also assume that the issue of having K9 service present was fully considered in the light of providing inspector access, the dog park located on site, and liability issues associated with the on-going site security issues.

Also, the Post-Closure Inspection Schedule (Table 1-3) of the revised maintenance plan indicates that site security will be inspected quarterly and semi-annually. What this entails is not specified in much detail. I have required the operator to conduct on-going inspection and repair of the facility's fences to help address the on-going security problems at the site. I would rather not see language that may appear to contradict that requirement or lead to the impression that the concern has been down-graded, which it hasn't. Please understand that **LEA acceptance of this plan is not intended to imply that the LEA will allow reduced inspection and maintenance of the facility's fences.**

LFG Monitoring System: The revised maintenance plan describes in section 1.4 (and on Table 1-3) monthly inspection of the LFG migration monitoring system for the first year and then quarterly, after that. Section 2.8.2 of the Facility's Final Closure Plan Amendment 2, however, states that the LFG control system's wells and collectors will be monitored monthly for methane and oxygen concentrations and adjusted as needed to provide optimum LFG migration control. That would seem to differ from what is proposed in the PCLUP after one year. Specifics are sparse so to avoid confusion, I want to make it clear that **LEA acceptance of the revised PCLUP is not intended to imply acceptance by the LEA of any relaxed inspection, maintenance, or monitoring activities or requirements by the operator**.

Drainage System Repairs: The revised maintenance plan describes monthly maintenance for the first year in section 1.3 and Table 1-3 shows quarterly and semi-annual maintenance after that. Same comment as above regarding the possible interpretation of relaxed maintenance requirements.

Also, the section states that any damage identified during the wet season would be repaired immediately. As mentioned previously, landfill staff have stated that unless the damage is very minor, drainage system repairs are often not possible during the wet season due to weather and muddy conditions. Staff continue to state that this is the case so please be sure to confirm that the city and LF operator support this statement before including it in the final document. Replacement of "immediately" with "as quickly as conditions allow" may make more sense.

Feel free to contact me if you would like to discuss any of these comments.

John Lewis
Environmental Specialist

County of Sacramento
Environmental Management Department
Cell: (916) 591-2696
Desk phone: (916) 876-7279
Fax: (916) 875-8513

From: Yekta, Gino [mailto:Gino.Yekta@CalRecycle.ca.gov]
Sent: Tuesday, January 08, 2013 12:18 PM
To: Lewis. John (EMD)
Cc: Todd. Lisa; Wochnick, Michael; AMcCready@SCSEngineers.com
Subject: RE: 28th Street Landill: Final Post Closure Land Use Plan, Revised December 21, 2012

Hi John: As I had mentioned pereviously, Revised plans are to be submitted whenever there are proposed changes – as with the case of the solar proposal. Updated plans as you know are due at least every 5 years; however, the revision requirement supersedes the update requirement. Overall, I agreew ith you that what is needed now is updating the Plans based on the project at hand. Hope this helps.....Gino

---

From: Lewis. John (EMD) [LewisJoh@saccounty.net]
Sent: Tuesday, January 08, 2013 12:03 PM
To: Yekta, Gino
Cc: Todd. Lisa
Subject: RE: 28th Street Landill: Final Post Closure Land Use Plan, Revised December 21, 2012

Gino: shouldn't you clarify to Ambrose that the intension is to update the C & PCMP areas that apply to the solar project now, and that the rest can wait 'til July 2013. I feel like we are sending some mixed messages which was sort of the point of my message to you the other day.

John Lewis
Environmental Specialist
County of Sacramento
Environmental Management Department
Cell: (916) 591-2696
Desk phone: (916) 876-7279
Fax: (916) 875-8513

From: Yekta, Gino [mailto:Gino.Yekta@CalRecycle.ca.gov]
Sent: Tuesday, January 08, 2013 11:52 AM
To: McCready, Ambrose; 'Dana Allen'; Tom Buford; Lewis. John (EMD); John Moody (John.Moody@waterboards.ca.gov)
Cc: Yvette Rincon; Janeth San Pedro; Steve Harriman; JP Tindell; Todd. Lisa; Loane, John; Wochnick, Michael; Taylor, Kevin
Subject: RE: 28th Street Landill: Final Post Closure Land Use Plan, Revised December 21, 2012

Hello Mr. McCready: Since the project is proposed to begin prior to July 1, 2013; Closure and Postclosure Maintenance Plans should be updated now and submitted to agencies for review and approval. Thanks.....Gino

---

From: McCready, Ambrose [AMcCready@SCSEngineers.com]
Sent: Tuesday, January 08, 2013 11:42 AM
To: Yekta, Gino; 'Dana Allen'; Tom Buford; John Lewis (LewisJoh@saccounty.net); John Moody (John.Moody@waterboards.ca.gov)
Cc: Yvette Rincon; Janeth San Pedro; Steve Harriman; JP Tindell; Todd. Lisa; Loane, John; Wochnick, Michael; Taylor, Kevin
Subject: RE: 28th Street Landill: Final Post Closure Land Use Plan, Revised December 21, 2012

Gino,

Regarding the submittal date July 1, 2013 for the updated Closure and Postclosure Maintenance Plans, SCS Engineers was responding to the LEA bullet under Comment 3. The July 1, 2013 date was provided by the LEA. If the date is different, can this be reconciled between CalRecycle and the LEA.

Construction of the Solar Arrays will likely begin prior to July 1, 2013. Please advise the City and SCS of the due date for the Updated Closure and Postclosure Maintenance Plan in advance of construction.

Ambrose A. McCready, P.E.

From: Yekta, Gino [mailto:Gino.Yekta@CalRecycle.ca.gov]
Sent: Monday, January 07, 2013 10:39 AM
To: 'Dana Allen'; Tom Buford; John Lewis (LewisJoh@saccounty.net); John Moody (John.Moody@waterboards.ca.gov)
Cc: Yvette Rincon; Janeth San Pedro; Steve Harriman; JP Tindell; Todd. Lisa; McCready, Ambrose; Loane, John; Wochnick, Michael; Taylor, Kevin
Subject: RE: 28th Street Landill: Final Post Closure Land Use Plan, Revised December 21, 2012

Hello Dana: We have reviewed responses to the CalRecycle comments and are ok with all of them except the response to our comment #3. The response states that the updated Closure and Post Closure Maintenance Plans (CPCMPs) are due by July 1, 2013. This date is not accurate, since the City is proposing changes to the final cover and PCMP (due to the PCLU Plan), revised plans are due now and not July 1, 2013.

Please note that the solar development cannot occur until the plans have been revised, submitted to and approved by the agencies. If the solar development project will be delayed until that time, then July 1, 2013 is an OK date for submittal. However, as stated above, if the project is to be implemented prior to approval of revised plans, then that date is not OK.

Please call (916-341-6354) or e-mail me if you have any questions. Thanks.....Gino

County of Sacramento Email Disclaimer: This email and any attachments thereto may contain private, confidential, and privileged material for the sole use of the intended recipient. Any review, copying, or distribution of this email (or any attachments thereto) by other than the County of Sacramento or the intended recipient is strictly prohibited. If you are not the intended recipient, please contact the sender immediately and permanently delete the original and any copies of this email and any attachments thereto.
County of Sacramento Email Disclaimer: This email and any attachments thereto may contain private, confidential, and privileged material for the sole use of the intended recipient. Any review, copying, or distribution of this email (or any attachments thereto) by other than the County of Sacramento or the intended recipient is strictly prohibited. If you are not the intended recipient, please contact the sender immediately and permanently delete the original and any copies of this email and any attachments thereto.

CalRecycle

DEPARTMENT OF RESOURCES RECYCLING AND RECOVERY

1001 I STREET, SACRAMENTO, CALIFORNIA 95814 • WWW.CALRECYCLE.CA.GOV • (916) 322-4027
P.O. BOX 4025, SACRAMENTO, CALIFORNIA 95812

December 3, 2012

Ms. Dana L. Allen
Environmental Planning Services
Community Development Department
City of Sacramento
300 Richards Boulevard, 3rd Floor
Sacramento, California 95811

28TH STREET LANDFILL, SACRAMENTO COUNTY, SWIS# 34-AA-0018
POSTCLOSURE LAND USE PLAN - SOLAR IMPROVEMENTS
REVIEW COMMENTS

Dear Ms. Allen:

Staff of the Engineering Support Branch of the California Department of Resources Recycling and Recovery (CalRecycle) has reviewed the Postclosure Land Use Plan (Plan) for the Solar Improvements on the 28th Street Landfill. The Plan has been prepared by SCS Engineers and is dated September 2012.

The Plan provides design information regarding the proposed solar generating panels on parts of the 28th Street landfill. The landfill is located within and is owned by the City of Sacramento (City). In general, the panels will be located on the west side of the landfill in three different arrays. Array 1 panels will be installed within the area known as the Parking Area with Array 2 in the Dog Park and Array 3 within the Soil Stockpile. All panels will be supported by columns and skids and, once installed, will be in direct contact with the final cover barriers in Arrays 1, 2, and 3.

Based on our review of the Plan, as well as a meeting held on November 15, 2012, CalRecycle staff provides the following comments.

1. It should be clearly stated in the Plan that the City of Sacramento, as the owner of the landfill, is the responsible party that would assure the site is maintained adequately and in accordance with the latest postclosure maintenance plan and this Plan.

2. Additional support and justification for the annual maintenance cost provided in the Plan needs to be provided.

3. If the City plans to implement the proposed solar development, the closure and postclosure maintenance plans would need to be amended to reflect and

address the proposed modifications. The revised plans are to be submitted to the agencies for review and approval.

4. Due to current security issues at the site and the potential (after installation of the panels) for further security breaches, CalRecycle staff recommends that a security plan be prepared that would assure security of the site will be maintained and that unauthorized persons will not be allowed to enter the site.

5. CalRecycle staff recommends that after installation of the panels, the site be inspected on a monthly frequency for at least the first year. After the end of this first year period, the inspection frequency would be reevaluated.

6. Approvals from the Sacramento County Environmental Management Division, Solid Waste Local Enforcement Agency as well as Central Valley Regional Water Quality Control Board should be secured prior to implementation of the Plan.

7. The City should ensure that the California Environmental Quality Act (CEQA) has been complied with.

Should you have any questions or comments concerning the above matter, please contact Gino Yekta of my staff or me at (916) 341-6354 or (916) 341-6289, respectively. Alternatively, staff may be contacted at gino.yekta@calrecylce.ca.gov or michael.wochnick@calrecylce.ca.gov.

Sincerely;

Michael B. Wochnick, PE, Manager
Closure and Technical Support Unit

cc: John Moody, Central Valley Regional water Quality Control Board, Sacramento
John Lewis, Sacramento County Solid Waste Local Enforcement Agency
Ambrose A. McCready, P.E., SCS Engineers

CALIFORNIA
Water Boards

EDMUND G. BROWN, JR.
GOVERNOR

MATTHEW RODRIQUEZ
SECRETARY FOR
ENVIRONMENTAL PROTECTION

Central Valley Regional Water Quality Control Board

10 December 2012

Ms. Dana L. Allen
Environmental Planning Services
Community Development Department
City of Sacramento
300 Richards Boulevard, 3rd Floor
Sacramento, California 95811

PROPOSED SOLAR COLLECTION FACILITY FOR 28TH STREET LANDFILL, CITY OF SACRAMENTO; WASTE DISCHARGE REQUIREMENTS ORDER NO. R5-2004-0039, SACRAMENTO COUNTY

Central Valley Water Board Permitting Unit staff has reviewed the September 2012 Post Closure Land Use Plan (report or proposal) for the 28th Street Landfill prepared by SCS Engineers. The report proposes installation of solar panel arrays on both sides of 28th Street west of the classified waste management units (WMUs A and B) at the site. The arrays would be sited on portions of the unclassified fill areas (CAI units) described in WDR Order No. R5-2004-0039.

Three solar panel arrays ranging up to 3.5 acres in area would be installed at the site, including one in the asphalt-covered parking area between 28th Street and WMU B; one in the dog park area on the west side of 28th Street; and one in the soil stockpile area immediately southwest of the dog park area. The project would involve some disturbance of the landfill cover in these areas for placement of support structures such as columns and footings. Trench work would also be involved for placement of utility lines. Up to 31 inches of settlement is expected in asphalt-covered areas and 23 inches in soil covered areas over the long term. The arrays' storm water runoff would be tied in to existing storm water facilities with sufficient capacity to handle a critical storm event under the WDRs. According to the City, the project will not be feasible unless it can be constructed during the summer 2013, as proposed. Water Board staff's comments are as follows:

1. Staff concurs with LEA and CalRecycle comments regarding the need for amendment of the Final Closure and Post Closure Maintenance Plan (FCPMP) for the landfill to address elements of the plan affected by the project. Such elements would include, for example, identification and description of the landfill units affected; proposed modifications to the cover design; construction reporting; financial assurances; cover settlement surveys/monitoring, plans for cover maintenance and repairs; facility operations; drainage controls; protection of landfill gas and groundwater monitoring systems; facility access; and change in land use.

2. The proposal needs to specifically address whether the project can be constructed and operated in compliance with WDR Order No. R5-2004-0039, including the April 2000 Standard Provisions, with specific emphasis on Facility Specifications. In making this demonstration, the proposal needs to identify those findings and requirements most relevant to the project (e.g., construction, monitoring, corrective action) and explain why the project would not violate the WDRs. References to Title 27 regulations, where relevant, should be included in this demonstration.

3. If the above evaluation indicates that the project cannot be constructed and/or operated in compliance with the current WDRs, the Discharger will need to apply for revised or amended WDRs. In such case, the Discharger would need to revise and re-submit the proposal, along with the revised/amended FCPMP as part of a Report of Waste Discharge (RWD) under Title 27, Section 21769. Completed Joint Technical Document (JTD) Index and WDR application forms would also need to be included with this submittal.

4. The project would need to obtain coverage under the General Storm Water Permit for Construction Activities, or otherwise demonstrate compliance with storm water regulations. Questions regarding this permit should be directed to Jacque Kelley of our office at (916) 464-4764.

5. The project proposal should clarify which areas are to be developed within Sutter's Landing Park and indicate which departments within the City (i.e., Parks or Utilities) will have responsibility for operating/maintaining these areas.

6. The proposal needs to demonstrate compliance with the California Environmental Quality Act (CEQA).

Thank you for the opportunity to comment on the proposed solar collection facility for the 28th Street Landfill. If you have any questions, please call me at (916) 464-4641.

JOHN MOODY
Water Resources Control Engineer
Title 27 Permitting and Mines

cc: Gino Yetka, CalRecycle, Sacramento
John Lewis, Sacramento County Environmental Management Department, Sacramento
Steve Harriman, City of Sacramento Department of Utilities, Sacramento
Ambrose McCready, SCS Engineers, Sacramento

Environmental Consultants
and Contractors

3117 Fite Circle
Suite 108
Sacramento, CA 95827

916 361-1297
FAX 916 361-1299
www.scsengineers.com

SCS ENGINEERS

January 3, 2013
File No. 01197137.05; Task 10

Mr. John Lewis
Environmental Management Department
County of Sacramento
10590 Armstrong Avenue
Mather, California 95655

Subject: Post Closure Land Use Plan Revisions
Solar Improvements
28th Street Landfill
Sacramento, California

Dear Mr. Lewis:

SCS Engineers (SCS) has prepared responses to agency comments on the Post Closure Land Use Plan that were received by the City of Sacramento (City) for the proposed Solar Improvements at the 28th Street Landfill, located in Sacramento, California. Letters were received from the Sacramento County Environmental Management Department, Local Enforcement Agency (LEA) for the subject landfill (December 7, 2012), CalRecycle (December 3, 2012), and the Central Valley Regional Water Quality Control Board (December 10, 2012). This letter and accompanying revised documents (Track Change Version) are in response to the comments contained in the letters. Each of the agency's comments is listed below in *Italics* with the corresponding SCS response.

SCS and the City understand that an update of the Post Closure Maintenance Plan (PCMP) needs to be prepared separately from these revisions by July 1, 2013. The update of the PCMP will incorporate the Final Solar Land Use Plan as approved by the reviewing agencies.

The following are agency comments and responses.

LEA Comments

1. *The integrity of the landfill cover under and around the solar panels must be maintained (27CCR, section 21090).*

Response. The integrity of 28th Street Landfill will be maintained by actions described in the Solar Improvements Final Post Closure Land Use Plan (PCLUP), which includes a Maintenance Plan for the cover.

2. *The solar panels and related infrastructure must not impede or prevent access by landfill staff or others to do necessary landfill maintenance, monitoring, and repairs (27CCR, sections 21090 and 20750).*

Response. A paragraph on grass and vegetation control has been added to Section 6 - Cover Maintenance of the PCLUP, and Section 1.2.1 - Landfill Cover of the Maintenance Plan.

3. Additional site security measures should be provided, recognizing that site security has been an on-going challenge at this facility and that the proposed project may attract individuals seeking to steel copper and other metals, or other items of value (27CCR sections 20530 and 21135).

Response. A Section 11 - Site Security has been added to the PCLUP.

- *In addition to revising the PCLUP and amending the facility's closure plan and post closure maintenance plan to address the proposed modifications now, the facility's post closure maintenance plan will need to be revised overall by July 1, 2013, per the requirements of 27CCR, section 21865. The revised plans must be submitted to the agencies for review and approval.*

Response. The City understands that the Post Closure Maintenance Plan must be updated by July 1, 2013. The updated plan will include the PCLUP.

- *The PCLUP should specify that the city is the responsible party and will assure the site is maintained adequately and in accordance with the latest post closure maintenance plan.*

  Response. A statement has been added at the beginning of the PCLUP identifying the City as the Responsible Party for implementation of the PCLUP.

- *The PCLUP should specify that the site be inspected monthly by the responsible party after panel installation. After one year, the LEA will consider a reduced frequency.*

  Response. Maintenance Plan Sections 1.3 – Drainage Plan, 1.4 – Landfill Gas Monitoring and Control Systems, and Table 1-3 have been changed to show monthly monitoring for the first year.

- *The City should ensure that CEQA is complied with.*

  Response. The City understands that CEQA requirements must be met for the solar installation. A statement that all CEQA requirements must be met prior to implementation has been added to the beginning paragraphs of the PCLUP.

LEA Notes from Review of PCLUP

1. Once all issues are addressed, the plan should be designated as "Final".

Response. The title has been changed to Final Post Closure Land Use Plan in this Track Change version of the PCLUP.

2. The order of the appendices doesn't match the Table of Contents.

Response. The appendices match the order of the Table of Contents.

3. The Plan states that the project site APNs are 001-0170-018, 019, 021, 026, and 003-0010-001 but it appears that the project would be limited to APNs 003-0010-001, as well as 003-0050-016 and 003-0042-002 which are not included.

Response. PCLUP Sections 1 – Project Location, and 2 – Setting and Past Investigations have been revised to indicate the APN numbers for Solar Arrays 1, 2, and 3.

4. The Plan states on page 2 that the landfill operates under 1984 solid waste facility permit. Since the site does not operate and is closed, this statement should be removed.

Response. PCLUP Section 3 – Permits has been revised to eliminate the statement that "the landfill operates under 1984 solid waste facility permit."

5. According to the Plan, Arrays 1 and 2 will penetrate the cover with columns and footings. Figures and structural footing details provide more info and are also a little confusing. Dog Park and Carport array footing may penetrate cover by as much as three feet. According to the Plan, there is 3' to 18' of soil cover over waste in the Dog Park. Additional clarification is needed.

Response. PCLUP Section 2 – Settings and Past Investigations has been revised to include additional clarification on the proposed footings for Solar Arrays 1, 2, and 3.

6. The Plan does not adequately address LEA concerns regarding additional security measures or potential for the project to pose an attractive nuisance. Site security is already a constant problem at this site and solar panels, cable, and equipment may attract thieves. The amended PCMP should detail additional measures to secure the site.

Response. A new Section 11 – Site Security has been added to the PCLUP.

7. The Plan should clarify that the RP has a firm to conduct inspections and maintenance.

Response. A statement has been added at the beginning of the PCLUP identifying the City as the Responsible Party for implementation of the PCLUP.

8. *The Maintenance Plan should more fully address LEA concerns about staff access for maintenance under and around PV panels, especially where mounted on the ground. Also:*

Response. A paragraph on Grass and Vegetation Control has been added to PCLUP Section 6 – Cover Maintenance.

- *How will issues associated with settling be corrected with panels in place?*

  Response. Additional clarification has been added to Maintenance Plan Section 1.2.1 – Landfill Cover.

- *What measures are there to ensure that the panels don't interfere with access to monitoring systems?*

  Response. A new Section 1.5.5 – Environmental Monitoring Systems has been added to the Maintenance Plan.

9. *The Maintenance Plan should specify weed/vegetation maintenance measures under and around panels on the ground in the unpaved stockpile area. Note: weed maintenance may be especially problematic if the alternative ground mount details are employed because there appears to be less space/access beneath the panels.*

Response. A paragraph on Grass and Vegetation Control has been added to PCLUP Section 6 – Cover Maintenance.

10. *The Maintenance Plan section 1.1 refers to inspection and maintenance activities detailed in subsequent sections, but fails to specify what the subsequent sections are. Please specify for reference.*

Response. Maintenance Plan Section 1.1 – Introduction has been revised to reference Sections 1.1 through 1.5.

11. *The Maintenance Plan section 1.3 states that damage to the drainage system will be addressed immediately after it is identified but section 1.5.4 states that drainage structure repairs will be made annually, prior to the wet season. Landfill staff generally delay repairs to the landfill drainage system until the following dry season when damage is noted during the wet season. Please clarify the policy.*

Response. Maintenance Plan Section 1.3 – Drainage System has been revised to indicate that repairs will be performed annually prior to the wet season and immediately if found during the wet season.

12. *Cost estimates for cover maintenance, gas monitoring, etc., seem extremely low. Are these amounts only for the solar area? Please clarify/confirm. Also, the cost estimates should be incorporated into the PCMP.*

Response. A breakdown of the Post Closure Cost Estimate has been added to the Maintenance Plan as Exhibit 1.

<u>CalRecycle Comments</u>

1. *It should be clearly stated in the Plan that the City of Sacramento, as the owner of the landfill, is the responsible party that would assure the site is maintained adequately and in accordance with the latest postclosure maintenance plan and this Plan.*

Response. A statement has been added at the beginning of the PCLUP identifying the City as the Responsible Party for implementation of the PCLUP.

2. *Additional support and justification for the annual maintenance cost provided in the Plan needs to be provided.*

Response. A breakdown of the Post Closure Cost Estimate has been added to the Maintenance Plan as Exhibit 1.

3. *If the City plans to implement the proposed solar development, the closure and postclosure maintenance plans would need to be amended to reflect and address the proposed modifications. The revised plans are to be submitted to the agencies for review and approval.*

Response. The City understands that the Post Closure Maintenance Plan must be updated by July 1, 2013. The updated plan will include the PCLUP.

4. *Due to current security issues at the site and the potential (after installation of the panels) for further security breaches, CalRecycle staff recommends that a security plan be prepared that would assure security of the site will be maintained and that unauthorized persons will not be allowed to enter the site.*

Response. A new Section 11 – Site Security has been added to the PCLUP.

5. *CalRecycle staff recommends that after installation of the panels, the site be inspected on a monthly frequency for at least the first year. After the end of this first year period, the inspection frequency would be reevaluated.*

Response. Maintenance Plan Sections 1.3 – Drainage Plan, 1.4 – Landfill Gas Monitoring and Control Systems, and Table 1-3 have been changed to show monthly monitoring for the first year.

6. *Approvals from the Sacramento County Environmental Management Division, Solid Waste Local Enforcement Agency as well as Central Valley Regional Water Quality Control Board should be secured prior to implementation of the Plan.*

Response. The City understands that approval from the Sacramento County Environmental Management Agency and the Central Valley Regional Water Quality Control Board must be obtained prior to implementation of the PCLUP.

7. *The City should ensure that the California Environmental Quality Act (CEQA) has been complied with.*

Response. The City understands that CEQA requirements must be met for the solar installation. A statement that all CEQA requirements must be met prior to implementation has been added to the beginning paragraphs of the PCLUP.

CVRWQCB's Comments

1. *Staff concurs with LEA and CalRecycle comments regarding the need for amendment of the Final Closure and Post Closure Maintenance Plan (FCPMP) for the landfill to address elements of the plan affected by the project. Such elements would include, for example, identification and description of the landfill units affected; proposed modifications to the cover design; construction reporting; financial assurances; cover settlement surveys/monitoring, plans for cover maintenance and repairs; facility operations; drainage controls; protection of landfill gas and groundwater monitoring systems; facility access; and change in land use.*

Response. The City understands that the Post Closure Maintenance Plan must be updated by July 1, 2013. The updated plan will include the PCLUP.

2. *The proposal needs to specifically address whether the project can be constructed and operated in compliance with WDR Order No. R5-2004-0039, including the April 2000 Standard Provisions, with specific emphasis on Facility Specifications. In making this demonstration, the proposal needs to identify those findings and requirements most relevant to the project (e.g., construction, monitoring, corrective action) and explain why the project would not violate the WDRs. References to Title 27 regulations, where relevant, should be included in this demonstration.*

Response. A statement has been added in the beginning paragraphs of the PCLUP that the proposed solar arrays can be constructed and operated in compliance with WDR Order No. R5-2004-0039 and that CCR, Title 27 requirements will not be violated.

3. *If the above evaluation indicates that the project cannot be constructed and/or operated in compliance with the current WDRs, the Discharger will need to apply for revised or amended WDRs. In such case, the Discharger would need to revise and re-submit the proposal, along with the revised/amended FCPMP as part of a Report of Waste Discharge (RWD) under Title 27, Section 21769. Completed Joint Technical Document (JTD) Index and WDR application forms would also need to be included with this submittal.*

Response. See response to 2 above.

4. *The project would need to obtain coverage under the General Storm Water Permit for Construction Activities, or otherwise demonstrate compliance with storm water regulations. Questions regarding this permit should be directed to Jacque Kelley of our office at (916) 464-4764.*

Response. A construction SWPPP will be prepared for the project prior to construction.

5. *The project proposal should clarify which areas are to be developed within Sutter's Landing Park and indicate which departments within the City (i.e., Parks or Utilities) will have responsibility for operating/maintaining these areas.*

Response. PCLUP Sections 1 – Project Location, and 2 – Setting and Past Investigations have been revised to indicate the APN numbers for Solar Arrays 1, 2, and 3.

6. *The proposal needs to demonstrate compliance with the California Environmental Quality Act (CEQA).*

Response. The City understands that CEQA requirements must be met for the solar installation. A statement that all CEQA requirements must be met prior to implementation has been added to the beginning paragraphs of the PCLUP.

We trust that the above responses to agency comments meet your satisfaction. Approval of the Final Post Closure Land Use Plan for the 28th Street Landfill is requested.

Please call the undersigned with questions.

Very truly yours,

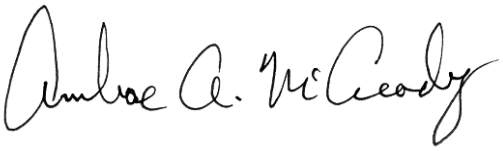

Ambrose A. McCready, P.E.
Project Manager
SCS ENGINEERS